McGRATH SUB-REGIONAL HEALTH CENTER

McGrath, Alaska
AN-08-GK7

Construction Documents Set

Denali Commission

510 L Street
Suite 410, Peterson Tower
Anchorage, Alaska 99501
Main Phone: (907) 271-1414
Phone: (907) 271-1189
Toll Free: (888) 480-4321
Fax: (907) 271-1415
http://www.denali.gov
Nancy Merriman - Project Manager

Alaska Native Tribal Health Consortium

Department of Environmental Health and Engineering
Central Engineering Services
1901 Bragaw Street, Ste 200
Anchorage, Alaska 99508
Phone: 800-560-8637 Ext#3604
Fax: (907) 729-3638
E-Mail: mtdickerson@anthc.org
http://www.anthc.org
Ted Dickerson- Project Manager

Project Team

Civil:
CRW Engineering Group, LLC
Anchorage, Alaska
Phone: 907-562-3252
Fax: 907-561-2273
Email: mschoming@crweng.com

Architectural:
Kluge and Associates
Kenai, Alaska
Phone: 907-283-3698
Fax: 907-283-9083
Email: Kluge@alaska.net

Dental Supplier:
Burkhart Dental Supply Company
Tacoma, WA
Phone: 253-474-7761
Fax: 253-212-4983
Contact: Carter Barnes

Structural:
Wm J. Nelson and Associates
Kenai, Alaska
Phone: 907-283-3583
Fax: 907-283-4514
Email: bnelson@alaska.net

Mechanical/Electrical:
Hay, Zietlow & Associates
Anchorage, Alaska
Phone: 907-562-1012
Email: alec@HZA-ENG.COM
Email: brett@HZA-ENG.COM

Furniture Supplier:
Capital Office Systems
Anchorage, AK
Phone:907-777-1522
Fax: 907-777-1516
Contact: Mary Whalen

Code Information:

IBC 2006

Building Type:	V-B (Non-Sprinkled)	Allowable SF.:	B: 9,000 sf.
Occupancy Group:	B-Clinic	Actual Building SF.:	6,113 sf.

Index

G-001 – Cover Sheet, Index
V-101 – Survey Control

Civil

C-001– Civil Legend
C-101 – Overall Site Plan
C-102– Detailed Site Plan
C-103– Grading Plan– North
C-104– Grading Plan– South
C-105– Horizontal Control
C-301– Onsite Wastewater System Plan and Profile
C-302– Civil Sections
C-303– Site Section
C-401– Concrete Parking Pad Details
C-501– Civil Details
C-502– Sign Details
C-503– Fence and Gate Details

Architectural

A-001– Abbreviations, General Notes, and Drawing Symbols
A-101 – Site Plan
A-102– Floor Plan
A-103– Reflected Ceiling Plan
A-104– Roof Plan
A-201– Exterior Elevations
A-301– Building Sections
A-401– Wall Sections
A-402– Interior Elevations
A-403– Interior Elevations & Details
A-501– Details
A-601– Finish Schedule, Wall Assemblies, & Details
A-602– Door/Frame Schedule & Details

Furniture & Equipment

Q-101 – Furniture Plan
Q-102– Exam Room Casegoods
Q-103– Exam Room Casegoods
Q-104– Trauma Exam Casegoods
Q-105– Office Workstations Typical
Q-106– Furniture Schedule

Dental

D-101 – Dental Plan
D-102 – Dental Plans
D-103 – Dental Details
D-104 – Dental Details
D-105 – Dental Details

Structural

S1.0 – General Notes
S2.0 – Foundation Plan
S2.1 – Foundation Details
S2.2 – Foundation Details
S3.0 – Roof Framing Plan
S3.1 – Roof Details
S4.0 – Shearwall Framing Plan
S5.0 – Truss Profiles

Mechanical

M0.1 – Equipment, Legend & Abbreviations
M0.2– Equipment Shedules
M1.1 – Crawlspace Plumbing Plan
M1.2 – Plumbing Plan
M2.1 – HVAC Plan
M3.1 – Mechanical Room and Sections
M4.1 – Mechanical Diagrams and Details
M5.1 – Mechanical Details

Electrical

E1.1 – Legend, Fixture Schedule and Details
E1.2 – Electrical Site Plan
E2.1 – Lighting Plan
E2.2 – Crawlspace Lighting and Power Plan
E3.1 – Power Plan
E3.2 – Enlarged Power Plans
E3.3 – Single Line Diagram and Panel Schedules
E4.1 – Signal Plans
E4.2 – Signal Details

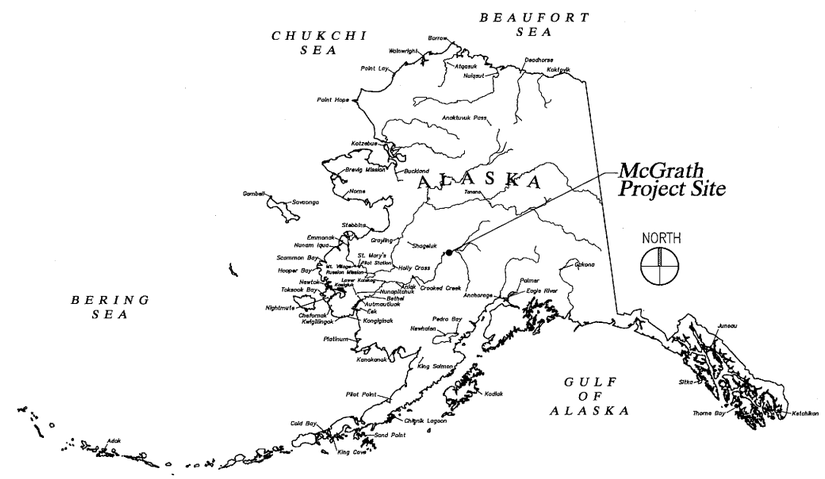

INIT.	REVISIONS	DATE

STATE OF ALASKA
WILLIAM A. KLUGE
A6301
REGISTERED PROFESSIONAL ARCHITECT
4-20-2009

ALASKA NATIVE TRIBAL HEALTH CONSORTIUM
DIVISION OF ENVIRONMENTAL HEALTH AND ENGINEERING
1901 SOUTH BRAGAW STREET, SUITE 200
ANCHORAGE, ALASKA, 99508-3440
(907) 729-3600

ALASKA NATIVE TRIBAL HEALTH CONSORTIUM

McGRATH SUB-REGIONAL HEALTH CENTER
COVER SHEET & INDEX

DATE: 4/20/2009
SCALE: AS NOTED
DRAWN BY: CFP

FILE NAME:
PROJECT NO: 0198
PROJ ARCH. BK

SHEET
G-001

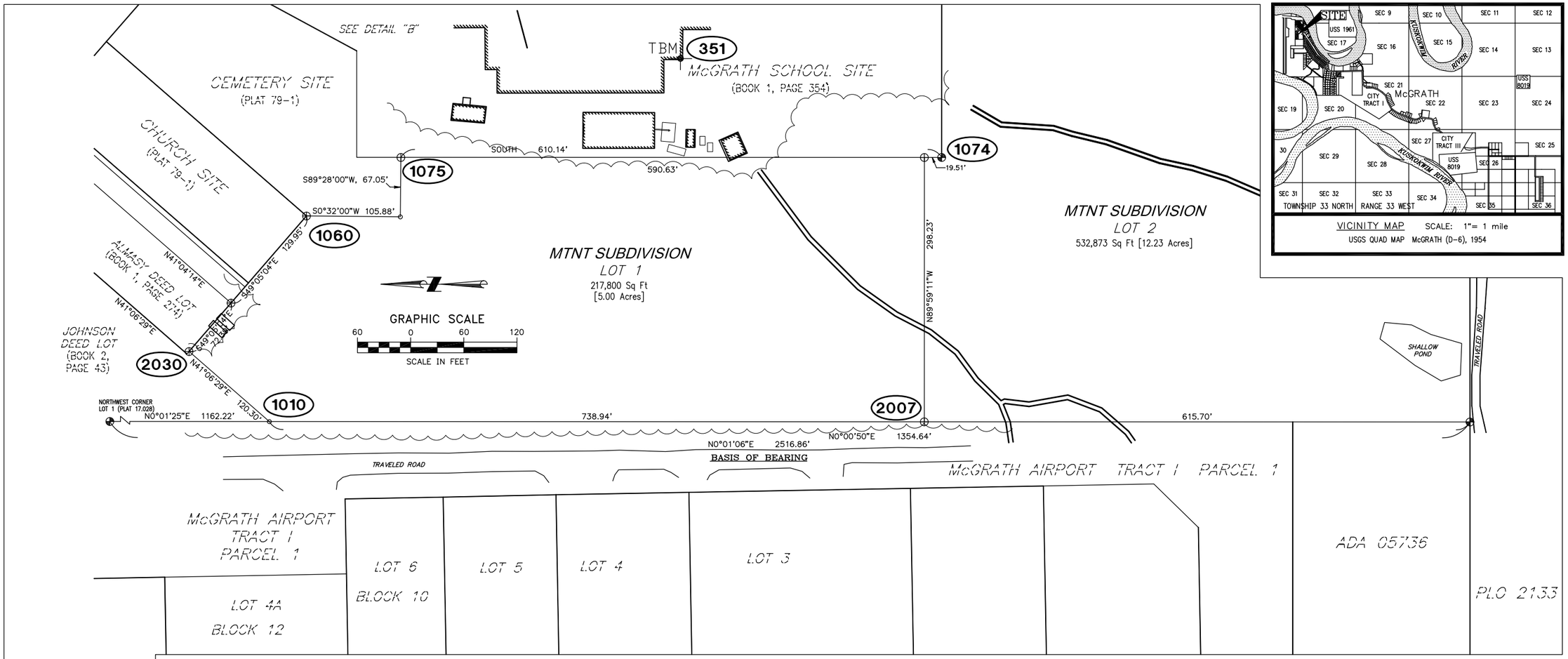

VICINITY MAP SCALE: 1"= 1 mile
USGS QUAD MAP McGRATH (D-6), 1954

Vertical Control

Vertical control is based on the NGS Benchmark MCGRATH NW BASE AZ MARK, Elevation = 340.35 feet (NAVD88), described as follows:

The station is located along the east side of McGrath, Alaska at McGrath Airport. The Airport is unrestricted. Contact the Airport Manger a minimum of 48 hours prior to entry. To reach the station from the airport main terminal, proceed northwest 0.09 miles across the apron to a point on the north edge of apron and 125 feet east of the T/W -A- Hold line. Turn right and proceed northerly 467 feet across small aircraft parking, parallel to R/W 16-34, and to the station on the right. The station is a standard CGS Azimuth Mark brass disk stamped: MCGRATH NW BASE 1951

Vertical Control Points

Pt. No.	Northing	Easting	Elevation	Description
601	53878	196616	340.35	3 1/2" Brass Cap set in concrete, stamped MCGRATH NW BASE 1951, found east of small airplane parking, and 9' west of a Carsinte marker in chain link fence.
351	53175	197647	344.63	X was marked on top, west edge of a conc. pillar support to building overhang at the southwest ent. to McGrath School, pillar is west of said enterance,

SOURCE
BENCH MARK
601

FLOOD MANAGEMENT

Flood information gathered from the U.S. Army Corps of Engineers, Pacific Ocean Division, Alaska District, Civil Works Branch, Floodplain Management Services website.
http://www.poa.usace.army.mil/en/cw/fld_haz/mcgrath.htm Floodplain Manager (907) 753-2610

Comments:

Recommended building elevation	340.0 MSL
100-year flood, or Base Flood Elevation	337.7 MSL
Potential ice jam flood	339.0 MSL

Significant flooding also occurred in 1957. It was reported that if the 1957 flood had been 1 foot higher it would have inundated nearly all of the ground in the community. The 1991 flood caused 20 to 30 homes to be flooded.

Horizontal Control

Coordinate System:
This project is a local surface grid coordinate system expressed in U.S. Survey feet. Horizontal data obtained from exsiting survey of Lots 1 and 2 MTNT SUBDIVISION, done by McClintock Land Associates, Inc. dated 8-08-05.

Horizontal Control Points

Pt. No.	Northing	Easting	Description
1010	53639.07	197237.05	1/2" Rebar w/ Yellow Plastic Cap, 0.30' above ground, cap not legible, rebar was sticking thru cap.
1060	53597.19	197469.05	1 1/2" ALCAP, 0.30' above ground, cap was damaged, only legible markings were TN S 197
1074	52880.55	197535.11	2" Brass cap set in 6" pipe with concrete, 0.40' below ground, cap good condition, marked COR 4
1075	53490.69	197535.11	1 1/2" ALCAP, flush w/ ground, cap good condition, marked 1981 4609-S
2007	52900.16	197236.85	2" ALCAP, flush w/ ground, cap good condition, marked Clinic C7, ARPT, S1962, MTNT LS-5480, 2005 MLA
2030	53729.72	197316.16	2" ALCAP, 0.30' above ground, cap good cond., marked Clinic C5, ALMASY, S1962, MTNT LS-5480, 2005 MLA

NOTES:

1. Whether listed or not, all monuments or property markers, corners, or accessories, which will be disturbed or buried, shall be referenced or re-established in their original position (A.S. 19.10.260) and recorded (A.S. 34.65.040).

Survey

Set	Found	
		BRASS CAP
●		ALCAP
		CONTROL MONUMENT (PUBLISHED)
		GPS CONTROL (LAT. LONG)
		IRON PIPE
•	○	REBAR
+	+	SPIKE
PK	PK	PK OR MAG NAIL
TBM	TBM	TBM
□	□	HUB
1000		Control Point Number

DATE	REVISIONS	INIT

STATE OF ALASKA
Michael L. Jokela
No. LS-7839
04-20-09
REGISTERED PROFESSIONAL LAND SURVEYOR

ALASKA NATIVE TRIBAL HEALTH CONSORTIUM
DIVISION OF ENVIRONMENTAL HEALTH AND ENGINEERING
1901 Bragaw Street, Suite 200
ANCHORAGE, ALASKA, 99508-3440
(907) 729-3600

ALASKA NATIVE TRIBAL HEALTH CONSORTIUM

McGRATH SUB-REGIONAL HEALTH CENTER
SURVEY CONTROL
100% DESIGN DRAWINGS

DATE: APRIL 2009
DRAWN BY: TSN
CHECKED BY: MS
PROJ MGR: TD
PROJ SURV: MS
TUS ENG:
FILE: MCG-V-STCNTL
LAYOUT: V-101

V-101
SHEET 1 OF 1

USER: TNORD FILE: J:\JOBSDATA\30303.05 MCGRATH HEALTH CENTER\00 CADD\01 WORKING SET\02 SURVEY\03 SURVEY CONTROL\MCG-V-STCNTL.DWG PLOT DATE: 4/30/2009 10:19 AM

CIVIL/SURVEY LEGEND

SYMBOLS

Water

Proposed	Existing	
FH	FH	FIRE HYDRANT
WV	WV	WATER VALVE
KB	KB	WATER KEY BOX
ARV	ARV	AIR RELIEF VALVE
BOV	BOV	BLOW OFF VALVE
WELL	W	WELL

Electric & Telephone Communication

- LIGHT POLE
- UTILITY POLE
- ELECTRIC PED
- EM ELECTRIC METER
- GUY ANCHOR
- GUY POLE
- E ELECTRICAL TRANSFORMER
- TM THERMISTOR
- TELEPHONE PED
- TB TELEPHONE BOOTH
- CABLE PED
- SATELLITE DISH

Sanitary Sewer

Proposed	Existing	
		SEWER MANHOLE
CO	CO	SEWER CLEANOUT
	V	SEPTIC VENT
CO	CO	SEPTIC CLEANOUT (MONITOR TUBE)
		SEWAGE LIFT STATION
REPS	REPS	RESIDENTIAL EFFLUENT PUMP STATION

Survey

Set	Found	
		BRASS CAP (3 3/4")
		BRASS CAP (3 1/4")
		ALCAP
		CONTROL MONUMENT (PUBLISHED)
		GPS CONTROL (LAT. LONG)
		IRON PIPE
		REBAR
		SPIKE
PK	PK	PK OR MAG NAIL
TBM	TBM	TBM
		HUB

Miscellaneous

- TP TEST PIT
- SB SOILS BORE
- P SIGN/PRIVATE
- T SIGN/TRAFFIC
- B BOLLARD
- G GATE POST
- F FLAG POLE

DETAIL LEGEND

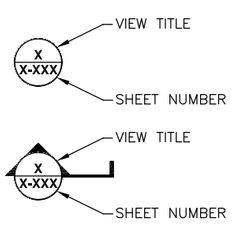

CALL OUT BUBBLE

SECTION INDICATOR

SITE PLAN

EXISTING		PROPOSED
	STRUCTURES	
	ROADS (PAVED)	
	ROADS (UNPAVED)	
	PROPERTY LINE	
C	COMMUNICATIONS LINE	C
P	POWER LINE	P
SS	SEWER SERVICE LINE	SS
WS	WATER SERVICE LINE	WS
S	SEWER LINE	S
W	WATER LINE	W
FM	FORCE MAIN	FM
X	FENCE	X
UT	UTILIDOR	UT
	RAILROAD	
340	CONTOUR	340
	DRAINAGE SWALE	
	CONCRETE, 4" THICK	
	CONCRETE, 6" THICK	
	AGGREGATE BASE COURSE	
	PREPARED SUBGRADE	
	SUBBASE MATERIAL	
	UNCLASSIFIED MATERIAL	
	TOPSOIL	
	ROCK LINE DITCH	

COMMON ABBREVIATIONS

ABS	ACRYLONITRILE BUTADIENE STYRENE	INV	INVERT
ALUM	ALUMINUM	LS	LIFT STATION
AS	ASPHALT	LF	LINEAR FEET
AWH	AUTOMATIC WATER HEATER	MH	MANHOLE
BC	BOTTOM OF CURB	MAX	MAXIMUM
BOT	BOTTOM	MIN	MINIMUM
CL	CENTERLINE	NFS	NON-FROST SUSCEPTIBLE
CO	CLEANOUT	N.C.	NORMALLY CLOSED
CONC	CONCRETE	N.O.	NORMALLY OPEN
LNK	CHAIN LINK	N	NORTH
CW	COLD WATER	NTS	NOT TO SCALE
CON	CONCRETE	NO	NUMBER
CMP	CORRUGATED METAL PIPE	OS	OFFSET
DIA	DIAMETER	OD	OUTSIDE DIAMETER
DWG	DRAWING	PSI	POUNDS PER SQUARE INCH
E	EAST	PP	POWER POLE
ELL	90° ELBOW	PT	PRESSURE TANK
EL	ELEVATION	REQ'D	REQUIRED
EQUIL	EQUIVALENT	REPS	RESIDENTIAL EFFLUENT PUMPING STATION
FT	FEET, FOOT	SIM	SIMILAR
FF	FINISHED FLOOR	S	SOUTH
FH	FIRE HYDRANT	SAS	SOIL ABSORPTION SYSTEM
FLG	FLANGE	SS	STAINLESS STEEL
FM	FORCE MAIN	STA	STATION
FND	FOUND	STL	STEEL
GA	GAGE	TC	TOP OF CURB
GALV	GALVANIZED	TW	TREATED WATER
GB	GRADE BREAK	TYP	TYPICAL
GRV	GRAVEL	U.O.N.	UNLESS OTHERWISE NOTED
HGR	HEATED GLYCOL RETURN	WWTF	WASTE WATER TREATMENT FACILITY
HGS	HEATED GLYCOL SUPPLY	WTP	WATER TREATMENT PLANT
HDPE	HIGH DENSITY POLYETHYLENE	WST	WATER STORAGE TANK
HP	HORSEPOWER	W	WEST
HB	HOSE BIBB	WD	WOOD
HW	HOT WATER		
ID	INSIDE DIAMETER		
INT	INTERSECTION		

CALL BEFORE YOU DIG!!!

Locate Call Center of Alaska, Inc. Statewide	800-478-3121
Alaska Railroad	265-2520
Military Fuel Lines	552-3760
State Storm Drains	333-2411
City of McGrath	524-3391

DATE	REVISIONS	INIT

STATE OF ALASKA 49TH MICAH K. SCHOMING CE 10568 04-20-09 REGISTERED PROFESSIONAL ENGINEER

ALASKA NATIVE TRIBAL HEALTH CONSORTIUM
DIVISION OF ENVIRONMENTAL HEALTH AND ENGINEERING
1901 Bragaw Street, Suite 200
ANCHORAGE, ALASKA, 99508-3440
(907) 729-3600

McGRATH SUB-REGIONAL HEALTH CENTER
CIVIL LEGEND
100% DESIGN DRAWINGS

DATE: APRIL 2009
DRAWN BY: TSN
CHECKED BY: MS
PROJ MGR: TD
PROJ ENG: MS
TUS ENG:
FILE: MCG-C-STLGND
LAYOUT: C-001

C-001
SHEET 1 OF 13

USER: TNORD FILE: J:\JOBSDATA\30303.05 MCGRATH HEALTH CENTER\00 CADD\01 WORKING SET\01 CIVIL\MCG-C-STLGND.DWG PLOT DATE: 4/20/2009 10:02 AM

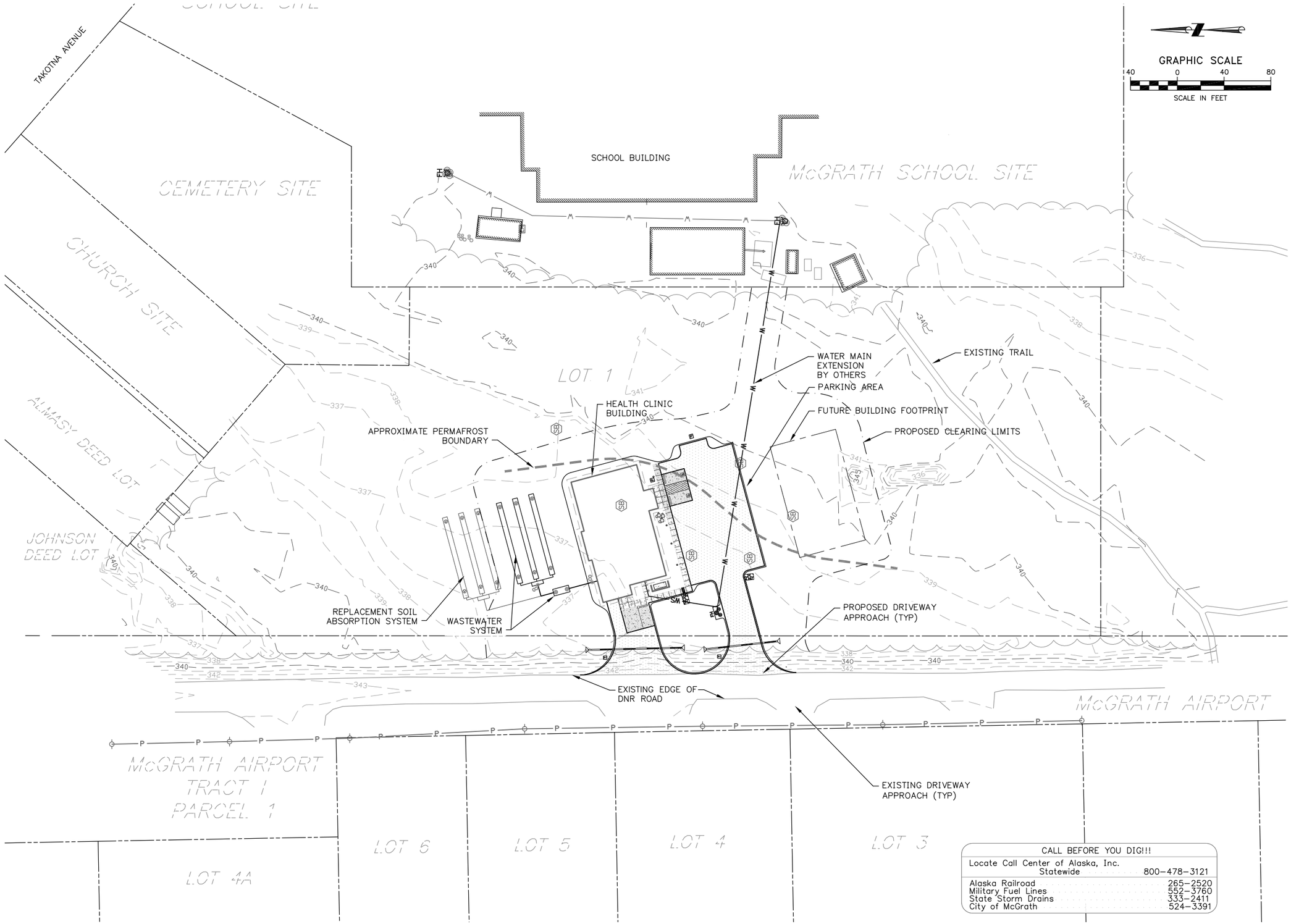

CALL BEFORE YOU DIG!!!	
Locate Call Center of Alaska, Inc. Statewide	800-478-3121
Alaska Railroad	265-2520
Military Fuel Lines	552-3760
State Storm Drains	333-2411
City of McGrath	524-3391

1 **OVERALL SITE PLAN**
Scale: 1" = 40'

DATE	REVISIONS	INIT

STATE OF ALASKA
49TH
MICAH K. SCHOMING
CE 10568
04-20-09
REGISTERED PROFESSIONAL ENGINEER

ALASKA NATIVE TRIBAL HEALTH CONSORTIUM

DIVISION OF ENVIRONMENTAL HEALTH AND ENGINEERING
1901 Bragaw Street, Suite 200
ANCHORAGE, ALASKA, 99508-3440
(907) 729-3600

McGRATH SUB-REGIONAL HEALTH CENTER
OVERALL SITE PLAN
100% DESIGN DRAWINGS

DATE: APRIL 2009
DRAWN BY: TSN
CHECKED BY: MS
FILE: MCG-C-STSITE1
PROJ MGR: TD
PROJ ENG: MS
TUS ENG:
LAYOUT: C-101

C-101
SHEET 2 OF 13

USER: TNORD FILE: J:\JOBSDATA\30303.05 MCGRATH HEALTH CENTER\00 CADD\01 WORKING SET\01 CIVIL\MCG-C-STSITE1.DWG PLOT DATE: 4/20/2009 10:14 AM

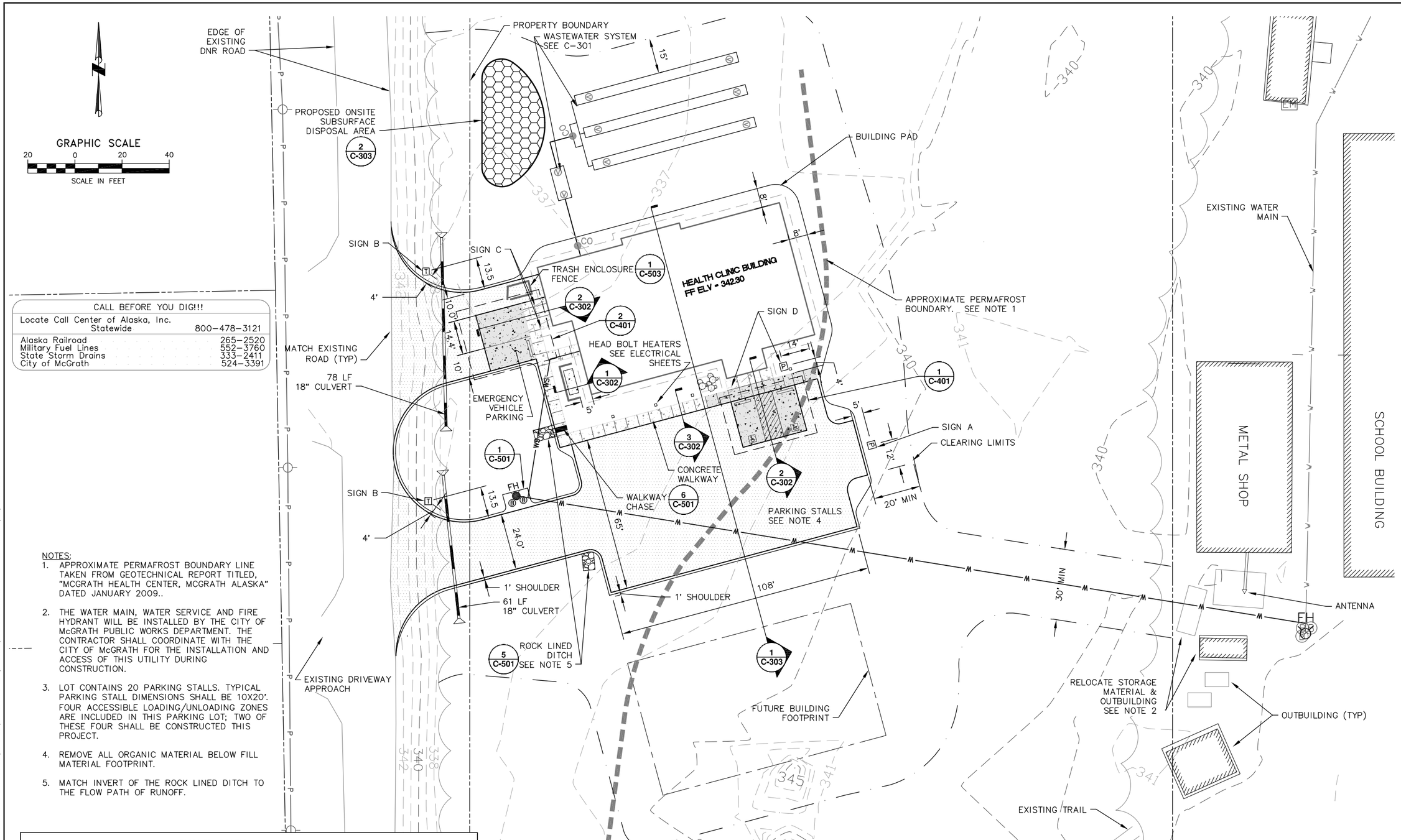

CALL BEFORE YOU DIG!!!	
Locate Call Center of Alaska, Inc. Statewide	800-478-3121
Alaska Railroad	265-2520
Military Fuel Lines	552-3760
State Storm Drains	333-2411
City of McGrath	524-3391

NOTES:

1. APPROXIMATE PERMAFROST BOUNDARY LINE TAKEN FROM GEOTECHNICAL REPORT TITLED, "MCGRATH HEALTH CENTER, MCGRATH ALASKA" DATED JANUARY 2009..
2. THE WATER MAIN, WATER SERVICE AND FIRE HYDRANT WILL BE INSTALLED BY THE CITY OF McGRATH PUBLIC WORKS DEPARTMENT. THE CONTRACTOR SHALL COORDINATE WITH THE CITY OF McGRATH FOR THE INSTALLATION AND ACCESS OF THIS UTILITY DURING CONSTRUCTION.
3. LOT CONTAINS 20 PARKING STALLS. TYPICAL PARKING STALL DIMENSIONS SHALL BE 10X20'. FOUR ACCESSIBLE LOADING/UNLOADING ZONES ARE INCLUDED IN THIS PARKING LOT; TWO OF THESE FOUR SHALL BE CONSTRUCTED THIS PROJECT.
4. REMOVE ALL ORGANIC MATERIAL BELOW FILL MATERIAL FOOTPRINT.
5. MATCH INVERT OF THE ROCK LINED DITCH TO THE FLOW PATH OF RUNOFF.

1 DETAILED SITE PLAN

Scale: 1"=20'

SIGN SUMMARY

SIGN	DESIGNATION	LEGEND	SIZE	FACING	POST TYPE
A	R7P-101	NO PARKING ANY TIME	18" X 24"	WEST	2" x 2"
B	R1-1	STOP	30" X 30"	EAST	2-1/2" x 2-1/2"
C	*	*	18" X 24"	WEST	AFFIX TO COLUMN SUPPORT FOR ROOF OVERHANG
D	R7-8	RESERVED PARKING	12" X 18"	SOUTH	EAST SIGN-2" X 2" WEST SIGN-AFFIX TO COLUMN SUPPORT FOR ROOF OVERHANG
E	R7-8A	VAN ACCESIBLE	12" X 6"	SOUTH	UNDER SIGN D-EAST

• SPECIAL SIGN SEE 1/C-502

MASS EARTHWORK QUANTITIES

CUT		FILL			WASTE	
ORGANICS	UNCLASSIFIED	ORGANICS	UNCLASSIFIED	CLASSIFIED	ORGANICS	UNCLASSIFIED
(CY)	(CY)	(CY)	(CY)	(CY)	(CY)	(CY)
900	1500	770	1200	2323	130	300

MASS EARTHWORK QUANTITIES NOTES:

1. VOLUME CALCULATIONS ASSUME 18 INCHES OF ORGANIC AND UNCLASSIFIED MATERIAL BELOW DRIVEWAY, PARKING LOT AND BUILDING PAD FILL WILL BE EXCAVATED. OTHER DISTURBED AREAS WILL ONLY REMOVE 6 INCHES OF ORGANIC MATERIAL.
2. THE EARTHWORK VOLUMES PRESENTED ON THIS SHEET ARE APPROXIMATE AND SHOULD NOT BE USED FOR BIDDING PURPOSES. IT IS THE CONTRACTOR'S RESPONSIBILITY TO CALCULATE ALL EARTHWORK VOLUMES FOR REQUIRED MATERIAL VOLUMES.

DATE	REVISIONS	INIT

STATE OF ALASKA 49TH MICAH K. SCHOMING CE 10568 04-20-09 REGISTERED PROFESSIONAL ENGINEER

ALASKA NATIVE TRIBAL HEALTH CONSORTIUM
DIVISION OF ENVIRONMENTAL HEALTH AND ENGINEERING
1901 Bragaw Street, Suite 200
ANCHORAGE, ALASKA, 99508-3440
(907) 729-3600

McGRATH SUB-REGIONAL HEALTH CENTER

DETAILED SITE PLAN
100% DESIGN DRAWINGS

DATE: APRIL 2009
DRAWN BY: TSN
CHECKED BY: MS
PROJ MGR: TD
PROJ ENG: MS
TUS ENG:
FILE: MCG-C-STSITE2
LAYOUT: C-102

C-102

SHEET 3 OF 13

USER: TNORD FILE: J:\JOBSDATA\30303.05 MCGRATH HEALTH CENTER\00 CADD\01 WORKING SET\01 CIVIL\MCG-C-STSITE2.DWG PLOT DATE: 4/20/2009 10:24 AM

NOTES:
1. TOPSOIL AND SEED ALL FILL SLOPES PER LANDSCAPE SHEET.

1 GRADING PLAN
Scale: 1"=10'

DATE	REVISIONS	INIT

STATE OF ALASKA
49TH
MICAH K. SCHOMING
CE 10568
04-20-09
REGISTERED PROFESSIONAL ENGINEER

ALASKA NATIVE TRIBAL HEALTH CONSORTIUM

DIVISION OF ENVIRONMENTAL HEALTH AND ENGINEERING
1901 Bragaw Street, Suite 200
ANCHORAGE, ALASKA, 99508-3440
(907) 729-3600

McGRATH SUB-REGIONAL HEALTH CENTER
GRADING PLAN – NORTH
100% DESIGN DRAWINGS

DATE: APRIL 2009
DRAWN BY: TSN
CHECKED BY: MS
FILE: MCG-C-STGRAD
PROJ MGR: TD
PROJ ENG: MS
TUS ENG:
LAYOUT: C-103

C-103
SHEET 4 OF 13

USER: TNORD FILE: J:\JOBSDATA\30303.05 MCGRATH HEALTH CENTER\00 CADD\01 WORKING SET\01 CIVIL\MCG-C-STGRAD.DWG PLOT DATE: 4/20/2009 10:33 AM

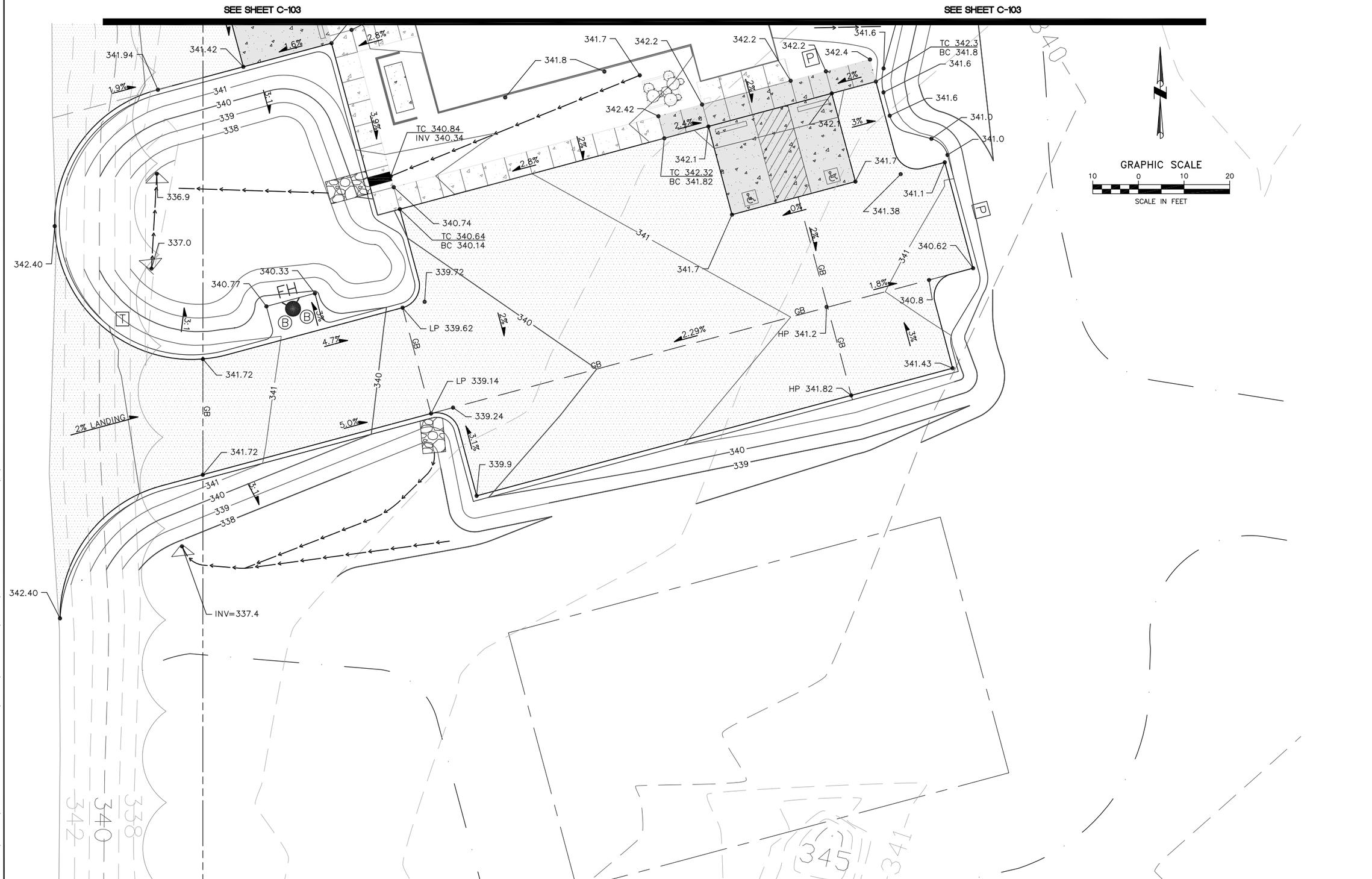

1 **GRADING PLAN**
Scale: 1"=10'

DATE	REVISIONS	INIT

STATE OF ALASKA
49TH
MICAH K. SCHOMING
CE 10568
04-20-09
REGISTERED PROFESSIONAL ENGINEER

ALASKA NATIVE TRIBAL HEALTH CONSORTIUM

DIVISION OF ENVIRONMENTAL HEALTH AND ENGINEERING
1901 Bragaw Street, Suite 200
ANCHORAGE, ALASKA, 99508-3440
(907) 729-3600

McGRATH SUB-REGIONAL HEALTH CENTER

GRADING PLAN - SOUTH
100% DESIGN DRAWINGS

DATE: APRIL 2009
DRAWN BY: TSN
CHECKED BY: MS
PROJ MGR: TD
PROJ ENG: MS
TUS ENG:
FILE: MCG-C-STGRAD
LAYOUT: C-104

C-104
SHEET 5 OF 13

USER: TNGRD FILE: J:\JOBSDATA\30303.05 MCGRATH HEALTH CENTER\00 CADD\01 WORKING SET\01 CIVIL\MCG-C-STGRAD.DWG PLOT DATE: 4/20/2009 10:34 AM

WASTEWATER SYSTEM		
POINT NUMBER	NORTHING	EASTING
101	53330.25	197283.92
102	53354.40	197277.45
103	53367.82	197273.85
104	53378.55	197270.98
105	53368.18	197287.34
106	53381.95	197283.64
107	53395.71	197279.95

WATER SYSTEM		
POINT NUMBER	NORTHING	EASTING
201	53174.26	197591.64
202	53227.59	197261.63
203	53228.39	197256.70
204	53286.46	197270.98
205	53289.86	197283.70

BUILDING		
POINT NUMBER	NORTHING	EASTING
301	53325.32	197265.57
302	53335.03	197301.79
303	53337.61	197301.10
304	53344.24	197325.86
305	53341.66	197326.55
306	53352.85	197368.28
307	53296.82	197383.30
308	53290.83	197360.92
309	53282.78	197363.07
310	53278.20	197346.01
311	53286.25	197343.85
312	53271.46	197288.63
313	53302.69	197280.27
314	53300.54	197272.23

NOTES:
1. TO OUTSIDE FINISH FACE OF BUILDING

DRIVEWAY AND PARKING		
POINT NUMBER	NORTHING	EASTING
401	53160.57	197205.64
402	53189.61	197227.87
403	53205.44	197286.94
404	53201.90	197293.04
405	53187.41	197296.92
406	53215.36	197401.24
407	53229.85	197397.36
408	53235.97	197400.90
409	53237.27	197405.72
410	53260.45	197399.51
411	53259.16	197394.68
412	53262.69	197388.56
413	53278.14	197384.42
414	53275.56	197374.76
415	53256.24	197379.94
416	53248.99	197352.89
417	53268.31	197347.72
418	53250.19	197280.10
419	53234.74	197284.24
420	53228.61	197280.71

DRIVEWAY AND PARKING		
POINT NUMBER	NORTHING	EASTING
421	53218.30	197242.23
422	53246.48	197204.47
423	53276.36	197227.08
424	53281.38	197245.81
425	53286.55	197265.13
426	53310.14	197258.80
427	53304.96	197239.48
428	53312.85	197268.92
429	53322.51	197266.33
430	53315.80	197241.29
431	53344.80	197203.53

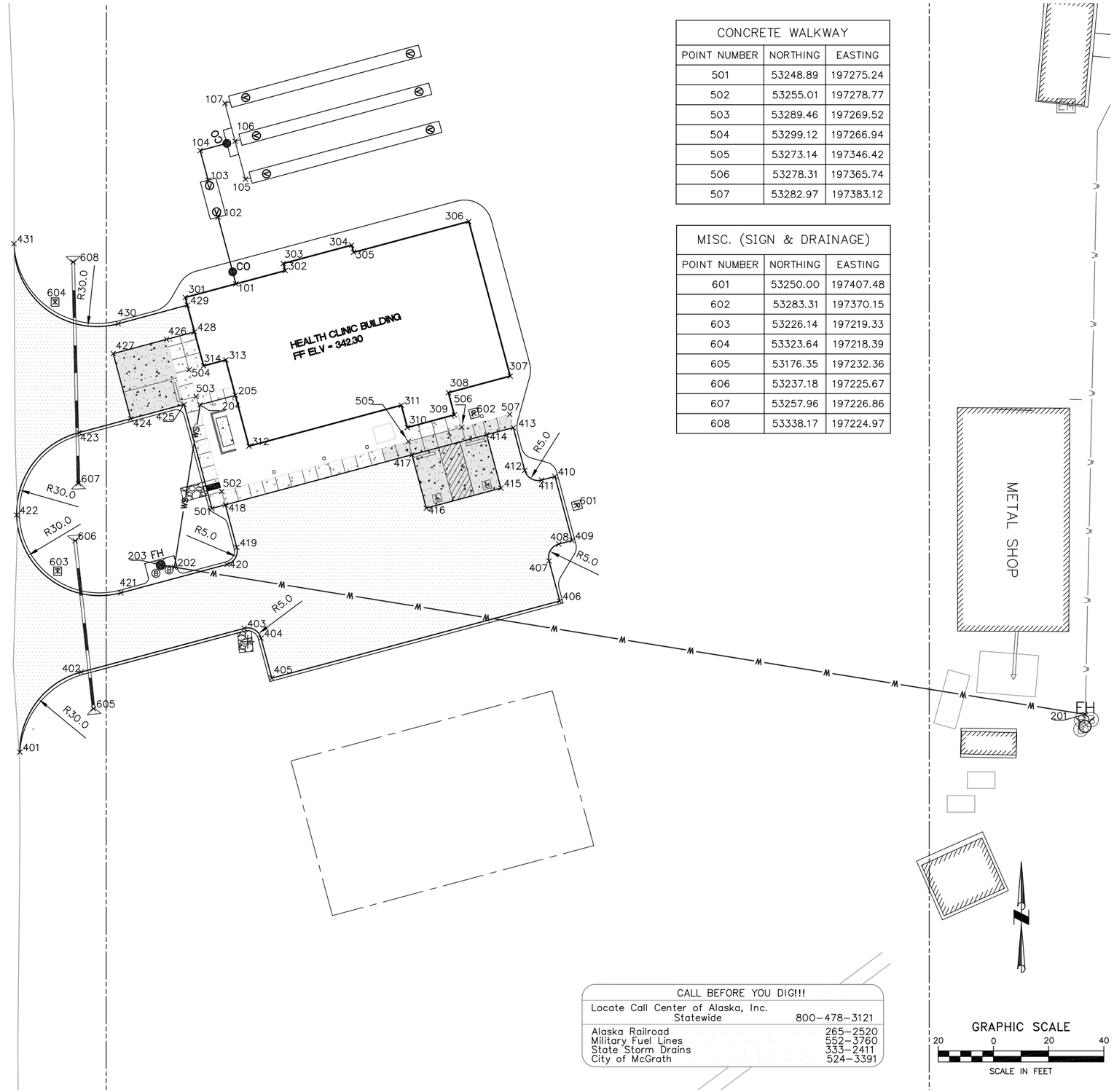

CONCRETE WALKWAY		
POINT NUMBER	NORTHING	EASTING
501	53248.89	197275.24
502	53255.01	197278.77
503	53289.46	197269.52
504	53299.12	197266.94
505	53273.14	197346.42
506	53278.31	197365.74
507	53282.97	197383.12

MISC. (SIGN & DRAINAGE)		
POINT NUMBER	NORTHING	EASTING
601	53250.00	197407.48
602	53283.31	197370.15
603	53226.14	197219.33
604	53323.64	197218.39
605	53176.35	197232.36
606	53237.18	197225.67
607	53257.96	197226.86
608	53338.17	197224.97

CALL BEFORE YOU DIG!!!

Locate Call Center of Alaska, Inc. Statewide	800-478-3121
Alaska Railroad	265-2520
Military Fuel Lines	552-3760
State Storm Drains	333-2411
City of McGrath	524-3391

1 **HORIZONTAL CONTROL**
Scale: 1"=20'

DATE	REVISIONS	INIT

STATE OF ALASKA
49TH
MICAH K. SCHOMING
CE 10568
04-20-09
REGISTERED PROFESSIONAL ENGINEER

ALASKA NATIVE TRIBAL HEALTH CONSORTIUM
DIVISION OF ENVIRONMENTAL HEALTH AND ENGINEERING
1901 Bragaw Street, Suite 200
ANCHORAGE, ALASKA, 99508-3440
(907) 729-3600

McGRATH SUB-REGIONAL HEALTH CENTER
HORIZONTAL CONTROL
100% DESIGN DRAWINGS

DATE: APRIL 2009
DRAWN BY: TSN
CHECKED BY: MS
PROJ MGR: TD
PROJ ENG: MS
TUS ENG:
FILE: MCG-C-STHZCONTROL
LAYOUT: C-105

C-105
SHEET 6 OF 13

USER: TNORD FILE: J:\JOBSDATA\30303.05 MCGRATH HEALTH CENTER\00 CADD\01 WORKING SET\01 CIVIL\MCG-C-STHZCONTROL.DWG PLOT DATE: 4/20/2009 10:36 AM

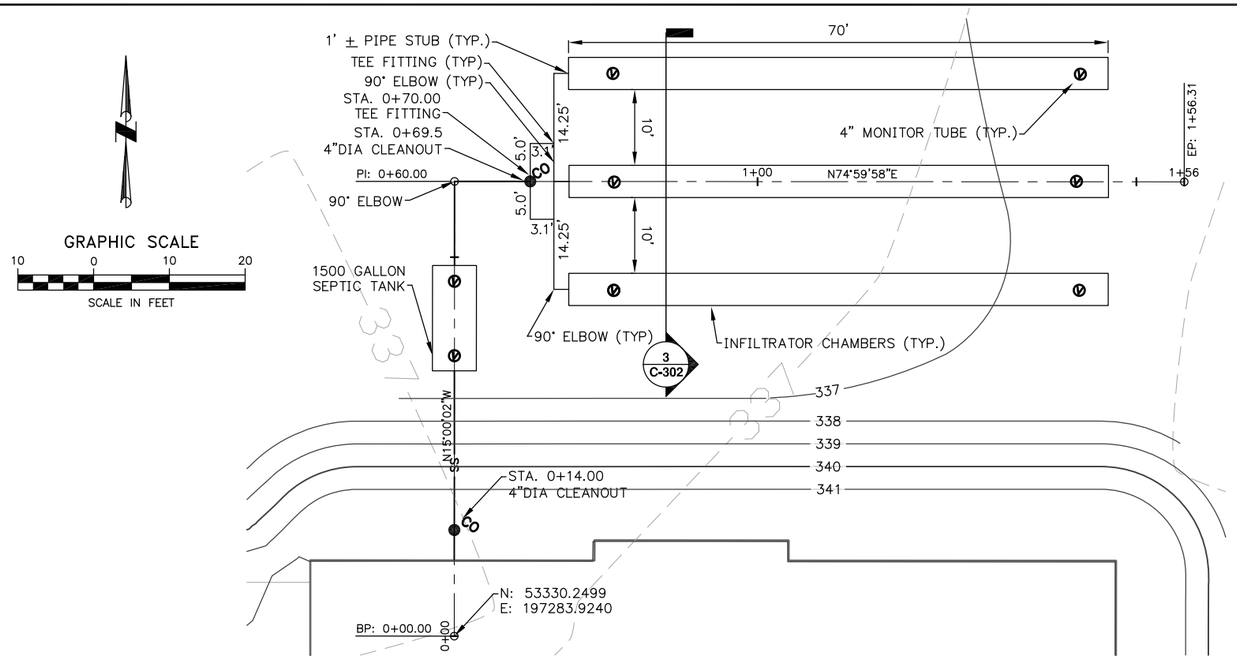

1 PLAN - ONSITE WASTEWATER SYSTEM

Scale: 1"=10'

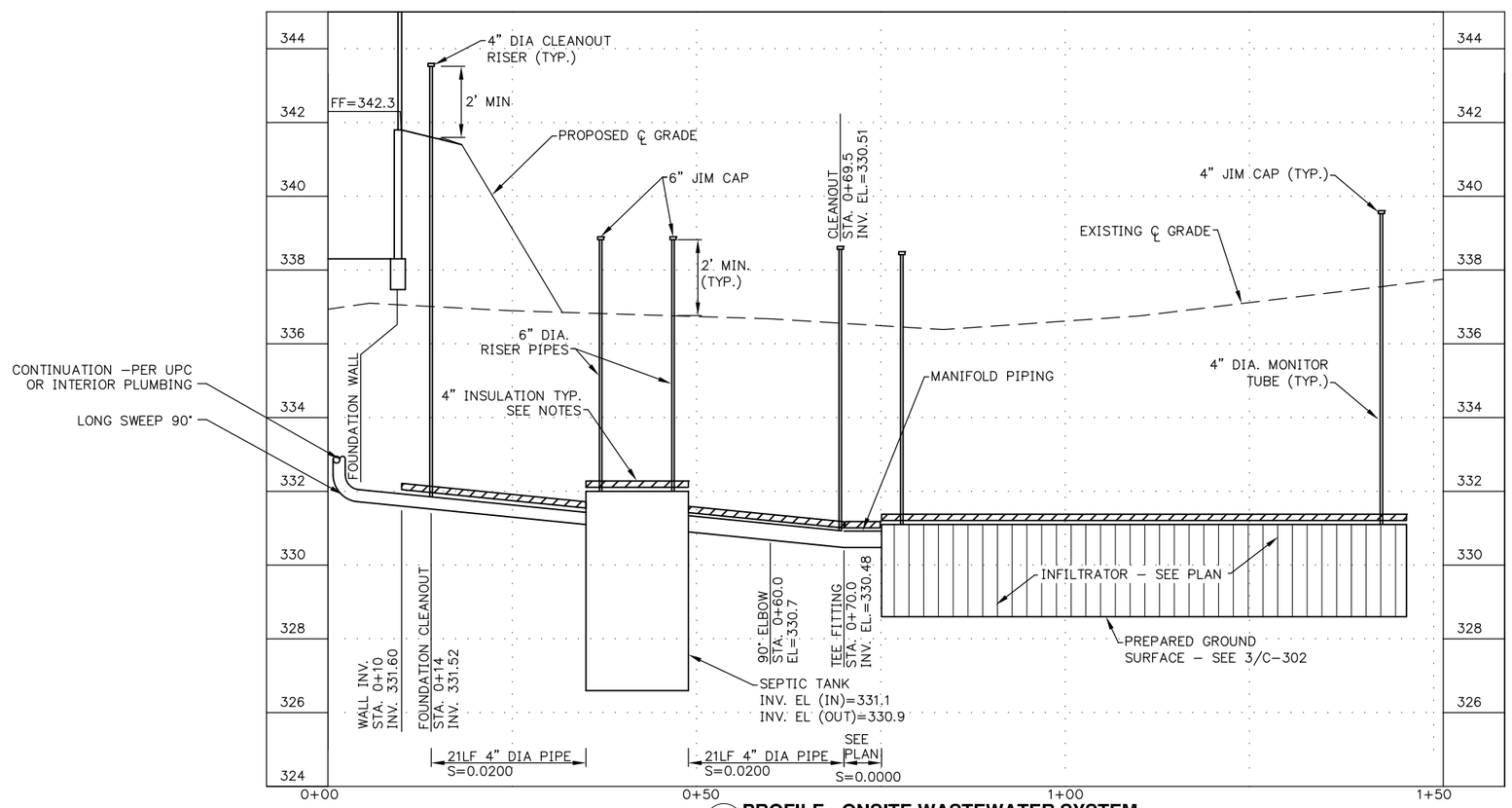

2 PROFILE - ONSITE WASTEWATER SYSTEM

Scale: Horizontal: 1" = 10', Vertical: 1" = 2'

NOTES:

1. DIRECTION OF CLEANOUTS SHALL SWEEP TOWARD SEPTIC TANK
2. WASTEWATER SYSTEM SHALL BE INSTALLED PER STATE OF ALASKA REGULATIONS 18 AAC 72
3. WASTEWATER SYSTEM SHALL INCLUDE 4" OF INSULATION CONTINUOUSLY FROM FOUNDATION WALL TO END OF SAS TRENCH. WIDTH SHALL COVER ENTIRE AREA OF TANK AND INFILTRATOR PLUS 1' OVERHANG EACH SIDE. WIDTH OF INSULATION OVER PIPE PER 5/C-302.
4. INSTALL BEDDING MATERIAL FOR PIPE AND SEPTIC PER SPECIFICATIONS.

DATE	REVISIONS	INIT

STATE OF ALASKA
49TH
MICAH K. SCHOMING
CE 10568
04-20-09
REGISTERED PROFESSIONAL ENGINEER

ALASKA NATIVE TRIBAL HEALTH CONSORTIUM
DIVISION OF ENVIRONMENTAL HEALTH AND ENGINEERING
1901 Bragaw Street, Suite 200
ANCHORAGE, ALASKA, 99508-3440
(907) 729-3600

ALASKA NATIVE TRIBAL HEALTH CONSORTIUM

McGRATH SUB-REGIONAL HEALTH CENTER

ONSITE WASTEWATER SYSTEM PLAN AND PROFILE

100% DESIGN DRAWINGS

DATE: APRIL 2009
DRAWN BY: TSN
CHECKED BY: MS
PROJ MGR: TD
PROJ ENG: MS
TUS ENG:
FILE: MCG-C-STLSV
LAYOUT: C-301

C-301

SHEET 7 OF 13

USER: TNORD FILE: J:\JOBSDATA\30303.05 MCGRATH HEALTH CENTER\00 CADD\01 WORKING SET\01 CIVIL\MCG-C-STLSV.DWG PLOT DATE: 4/20/2009 10:41 AM

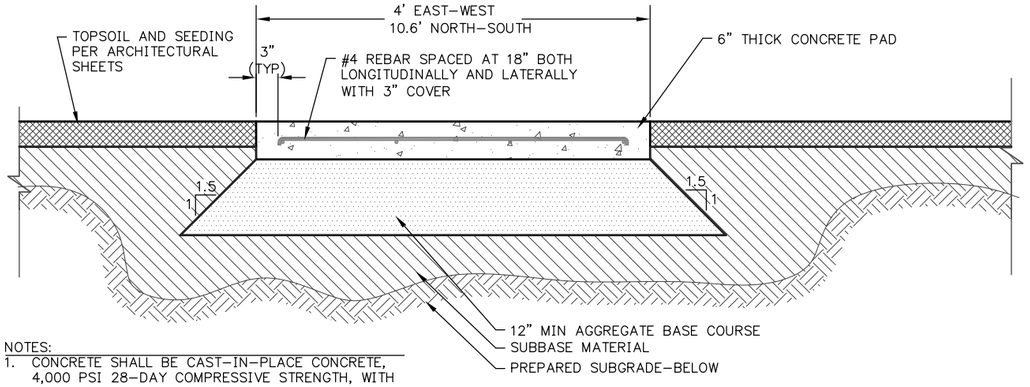

NOTES:
1. CONCRETE SHALL BE CAST-IN-PLACE CONCRETE, 4,000 PSI 28-DAY COMPRESSIVE STRENGTH, WITH A 6 INCH MINIMUM THICKNESS.
2. CONTRACTOR SHALL BE RESPONSIBLE FOR DESIGN OF MECHANICAL ANCHORAGE.
3. REBAR REINFORCEMENT GRADE 60

1 CONCRETE PAD FOR FUEL TANK
Scale: NTS

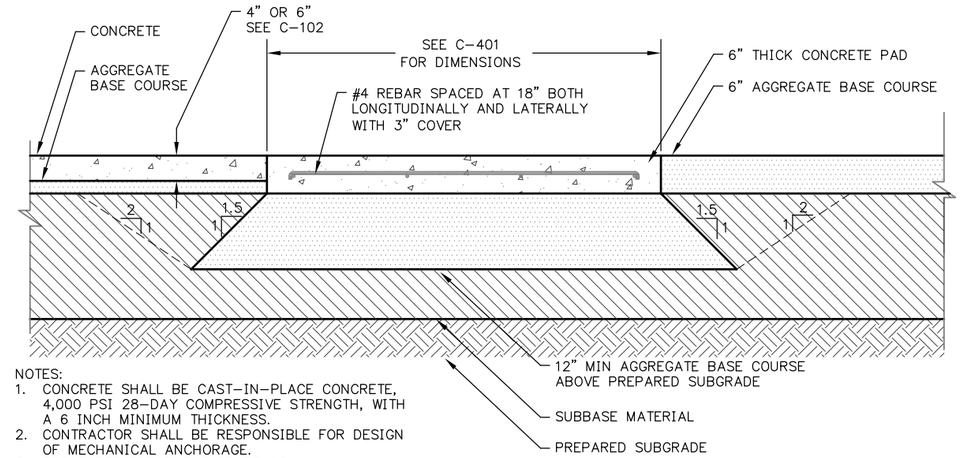

NOTES:
1. CONCRETE SHALL BE CAST-IN-PLACE CONCRETE, 4,000 PSI 28-DAY COMPRESSIVE STRENGTH, WITH A 6 INCH MINIMUM THICKNESS.
2. CONTRACTOR SHALL BE RESPONSIBLE FOR DESIGN OF MECHANICAL ANCHORAGE.
3. REBAR REINFORCEMENT GRADE 60

2 CONCRETE PAD FOR PARKING STALLS
Scale: NTS

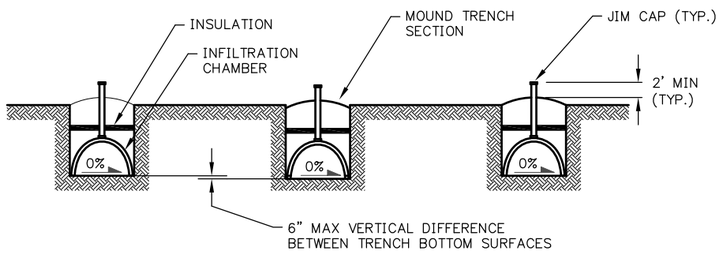

3 INFILTRATOR SECTION
Scale: NTS

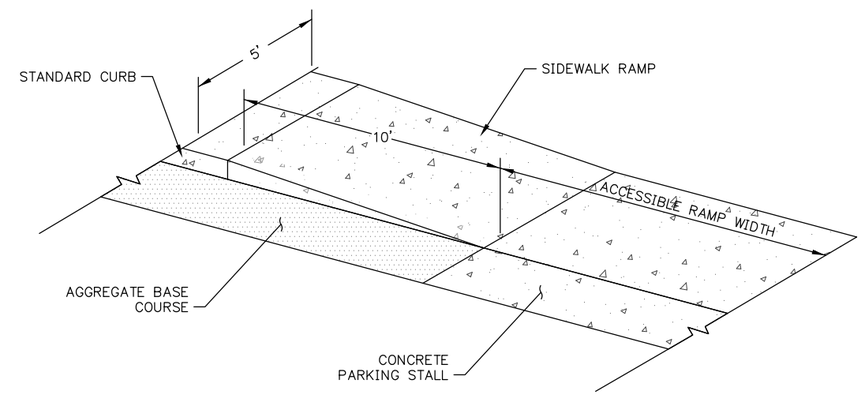

4 SIDEWALK AND ACCESSBILE RAMP ISOMETRIC
Scale: NTS

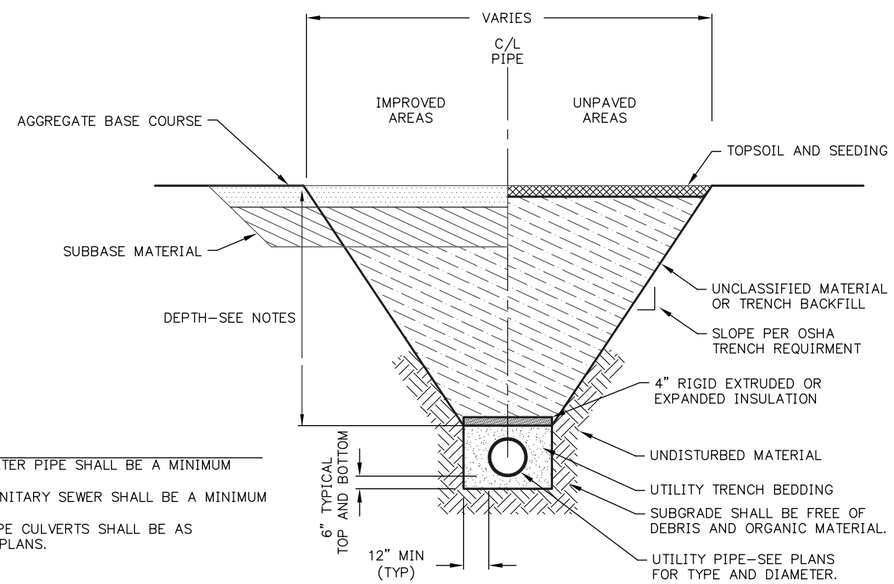

NOTES:
1. DEPTH FOR WATER PIPE SHALL BE A MINIMUM OF 5'.
2. DEPTH FOR SANITARY SEWER SHALL BE A MINIMUM OF 4'.
3. DEPTHS OF PIPE CULVERTS SHALL BE AS SPECIFIED IN PLANS.

5 TYPICAL UTILITY TRENCH SECTION
Scale: NTS

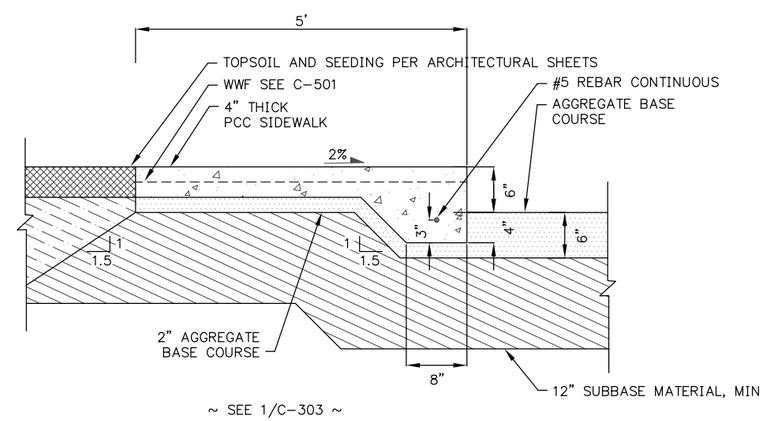

6 TYPICAL SIDEWALK SECTION
Scale: NTS

DATE	REVISIONS	INIT

STATE OF ALASKA 49TH MICAH K. SCHOMING CE 10568 04-20-09 REGISTERED PROFESSIONAL ENGINEER

ALASKA NATIVE TRIBAL HEALTH CONSORTIUM
DIVISION OF ENVIRONMENTAL HEALTH AND ENGINEERING
1901 Bragaw Street, Suite 200
ANCHORAGE, ALASKA, 99508-3440
(907) 729-3600

McGRATH SUB-REGIONAL HEALTH CENTER
CIVIL SECTIONS
100% DESIGN DRAWINGS

DATE: APRIL 2009
DRAWN BY: TSN
CHECKED BY: MS
FILE: MCG-C-STSECT
PROJ MGR: TD
PROJ ENG: MS
TUS ENG:
LAYOUT: C-302

C-302
SHEET 8 OF 13

USER: TNORD FILE: J:\JOBSDATA\30303.05 MCGRATH HEALTH CENTER\00 CADD\01 WORKING SET\01 CIVIL\MCG-C-STSECT.DWG PLOT DATE: 4/20/2009 10:47 AM

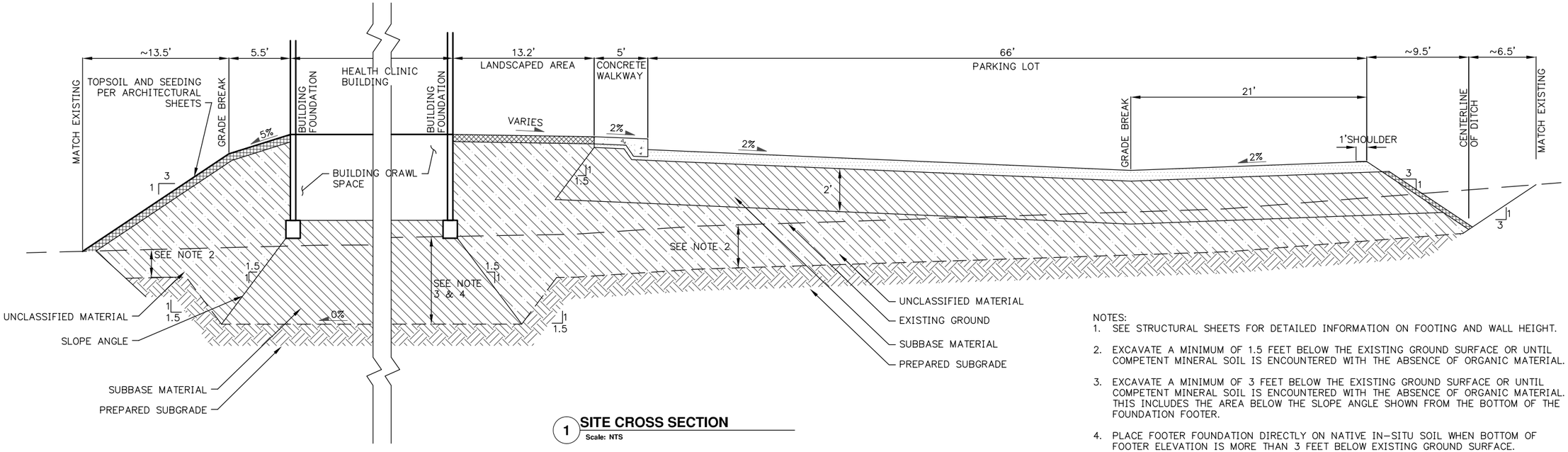

1 SITE CROSS SECTION

Scale: NTS

NOTES:

1. SEE STRUCTURAL SHEETS FOR DETAILED INFORMATION ON FOOTING AND WALL HEIGHT.
2. EXCAVATE A MINIMUM OF 1.5 FEET BELOW THE EXISTING GROUND SURFACE OR UNTIL COMPETENT MINERAL SOIL IS ENCOUNTERED WITH THE ABSENCE OF ORGANIC MATERIAL.
3. EXCAVATE A MINIMUM OF 3 FEET BELOW THE EXISTING GROUND SURFACE OR UNTIL COMPETENT MINERAL SOIL IS ENCOUNTERED WITH THE ABSENCE OF ORGANIC MATERIAL. THIS INCLUDES THE AREA BELOW THE SLOPE ANGLE SHOWN FROM THE BOTTOM OF THE FOUNDATION FOOTER.
4. PLACE FOOTER FOUNDATION DIRECTLY ON NATIVE IN-SITU SOIL WHEN BOTTOM OF FOOTER ELEVATION IS MORE THAN 3 FEET BELOW EXISTING GROUND SURFACE.

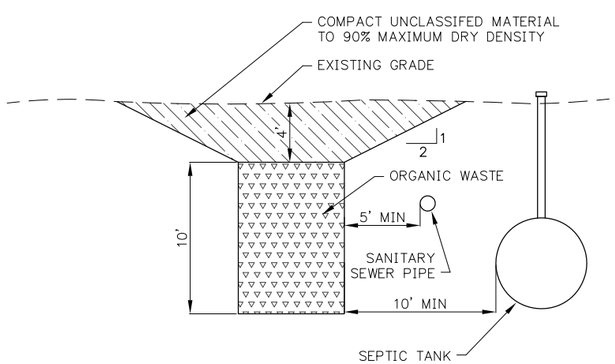

2 ONSITE SUBSURFACE DISPOSAL AREA

Scale: NTS

DATE	REVISIONS	INIT

STATE OF ALASKA
49TH
MICAH K. SCHOMING
CE 10568
04-20-09
REGISTERED PROFESSIONAL ENGINEER

ALASKA NATIVE TRIBAL HEALTH CONSORTIUM

DIVISION OF ENVIRONMENTAL HEALTH AND ENGINEERING
1901 Bragaw Street, Suite 200
ANCHORAGE, ALASKA, 99508-3440
(907) 729-3600

ALASKA NATIVE TRIBAL HEALTH CONSORTIUM

McGRATH SUB-REGIONAL HEALTH CENTER
SITE SECTION
100% DESIGN DRAWINGS

DATE: APRIL 2009
DRAWN BY: TSN
CHECKED BY: MS
PROJ MGR: TD
PROJ ENG: MS
TUS ENG:
FILE: MCG-C-STSECT
LAYOUT: C-303

C-303

SHEET 9 OF 13

USER: TNORD FILE: J:\JOBSDATA\30303.05 MCGRATH HEALTH CENTER\00 CADD\01 WORKING SET\01 CIVIL\MCG-C-STSECT.DWG PLOT DATE: 4/20/2009 10:47 AM

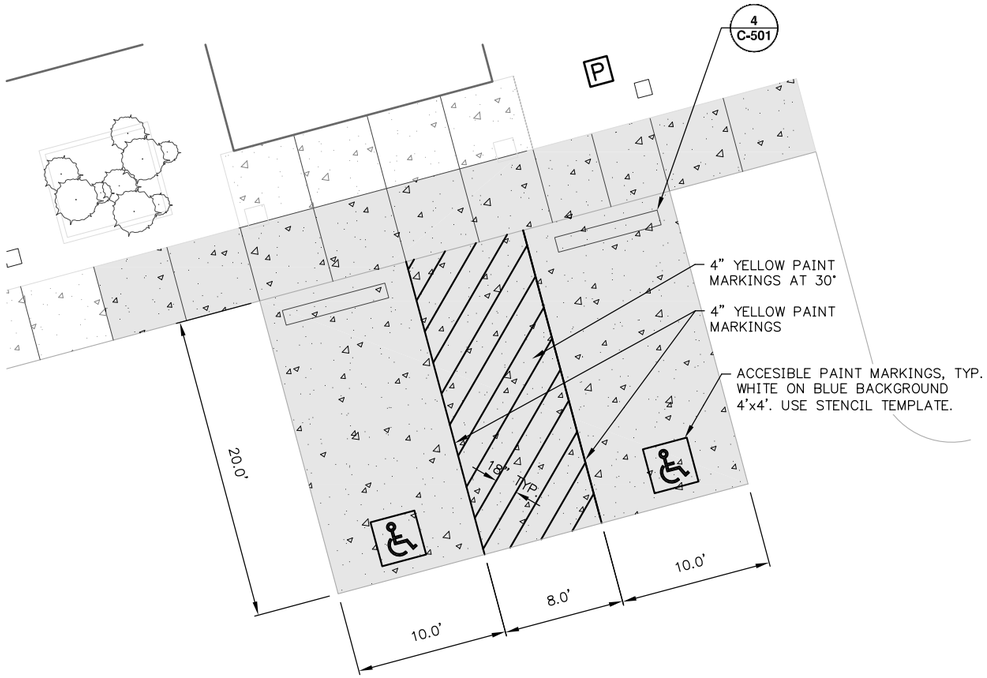

A PAINT MARKINGS DETAIL
Scale: 1"=5'

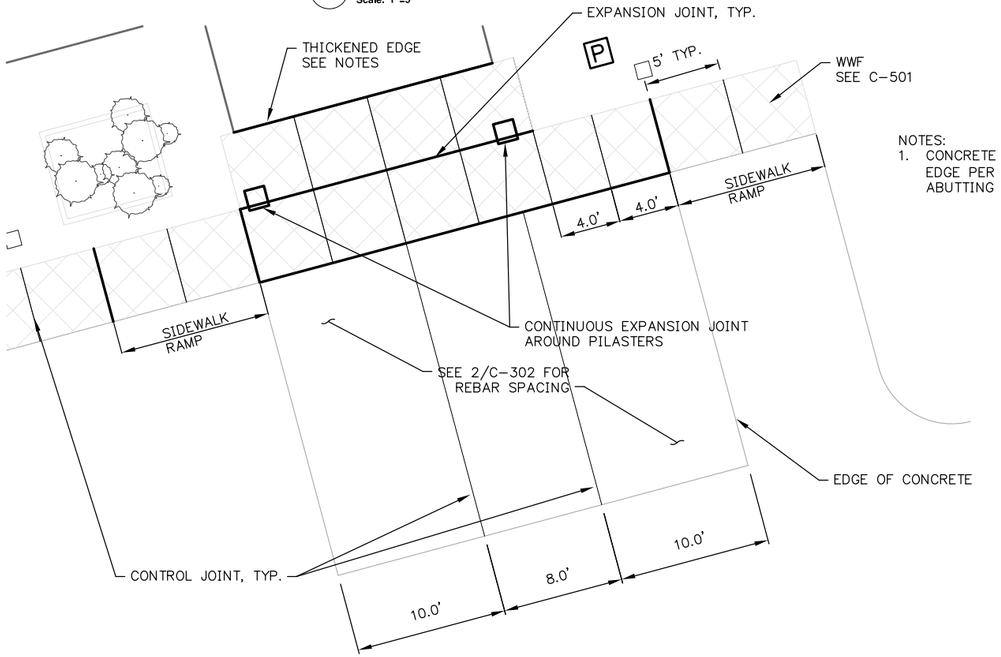

NOTES:
1. CONCRETE WALKWAY SHALL HAVE A THICKENED EDGE PER 6/C-302 AT ALL LOCATIONS ABUTTING THE BUILDING FOUNDATION.

B CONCRETE JOINT DETAIL
Scale: 1"=5'

1 HANDICAP PARKING CONCRETE PAD DETAILS
Scale: SEE DETAIL

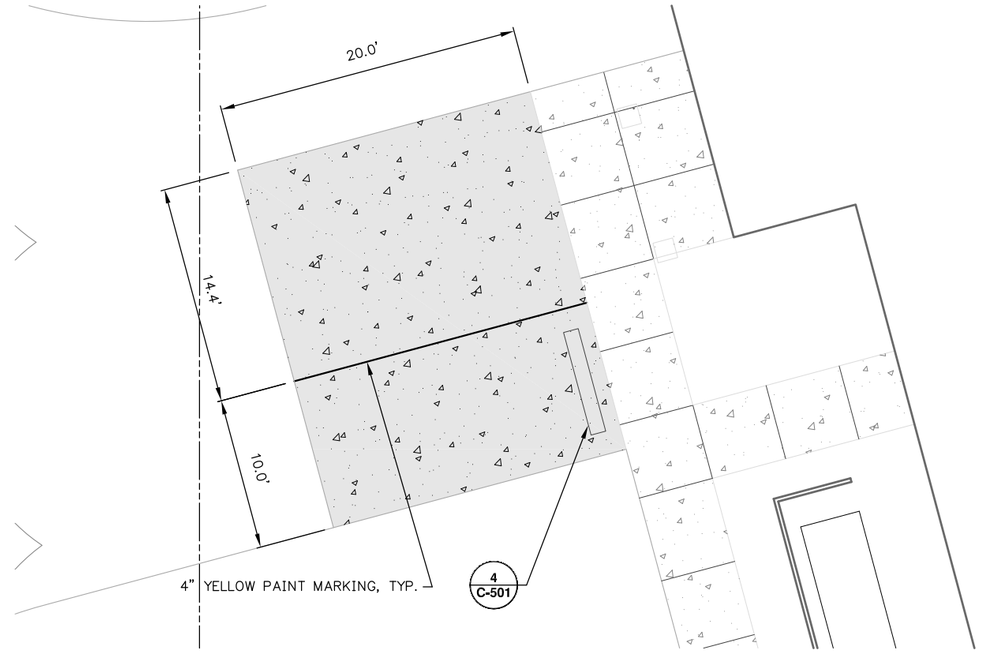

A PAINT MARKINGS DETAIL
Scale: 1"=5'

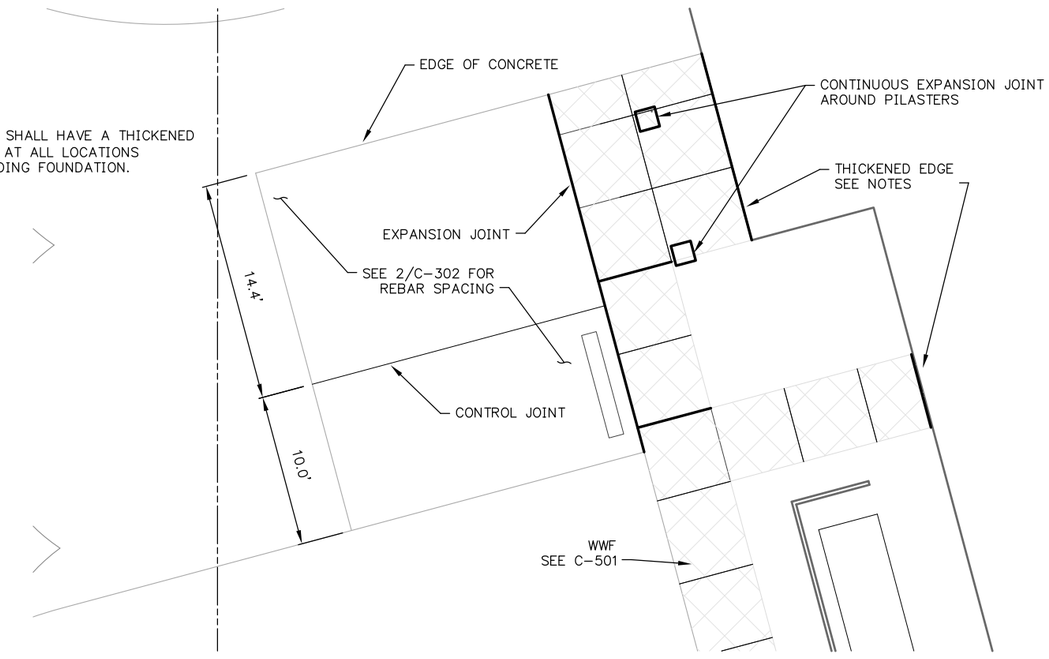

B CONCRETE JOINT DETAIL
Scale: 1"=5'

2 EMERGENCY VEHICLE PARKING CONCRETE PAD DETAILS
Scale: SEE DETAIL

DATE	REVISIONS	INIT

STATE OF ALASKA
49TH
MICAH K. SCHOMING
CE 10568
04-20-09
REGISTERED PROFESSIONAL ENGINEER

ALASKA NATIVE TRIBAL HEALTH CONSORTIUM
DIVISION OF ENVIRONMENTAL HEALTH AND ENGINEERING
1901 Bragaw Street, Suite 200
ANCHORAGE, ALASKA, 99508-3440
(907) 729-3600

ALASKA NATIVE TRIBAL HEALTH CONSORTIUM

McGRATH SUB-REGIONAL HEALTH CENTER

CONCRETE PARKING PAD DETAILS
100% DESIGN DRAWINGS

DATE: APRIL 2009
DRAWN BY: TSN
CHECKED BY: MS
PROJ MGR: TD
PROJ ENG: MS
TUS ENG:
FILE: MCG-C-STLSV
LAYOUT: C-401

C-401
SHEET 10 OF 13

USER: TNORD FILE: J:\JOBSDATA\30303.05 MCGRATH HEALTH CENTER\00 CADD\01 WORKING SET\01 CIVIL\MCG-C-STLSV.DWG PLOT DATE: 4/20/2009 10:49 AM

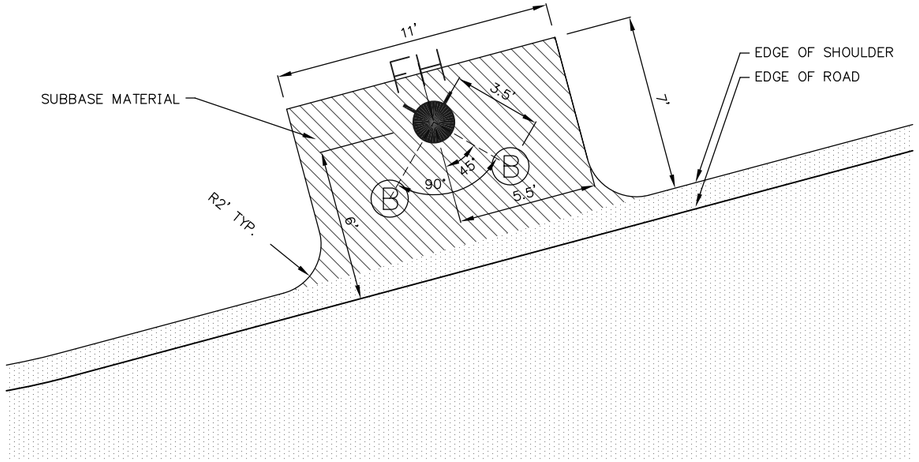

1 FIRE HYDRANT PAD DETAIL
Scale: NTS

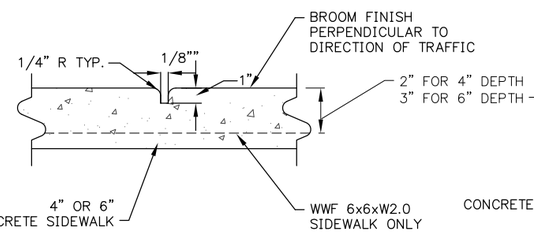

NOTE:
SPACE JOINT AT 5' O.C. OR AS SHOWN ON SITE/GRADING PLANS.

2 CONTROL JOINT
Scale: NTS

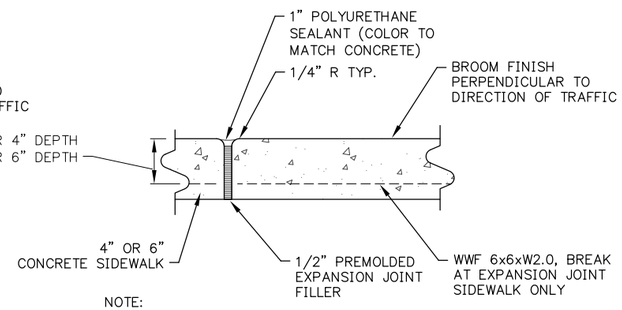

NOTE:
SPACE JOINT AT 20' O.C. AND BETWEEN CHANGE IN CONTROL JOINT GRIDS.

3 EXPANSION JOINT
Scale: NTS

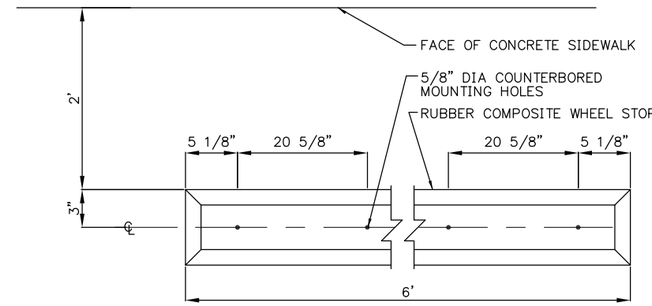

PLAN
N.T.S.

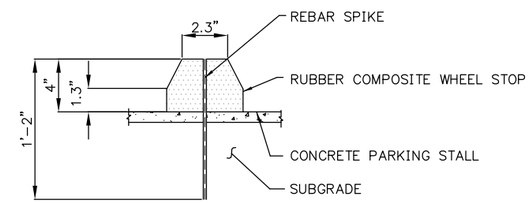

SECTION
N.T.S.

4 WHEEL STOP
Scale: NTS

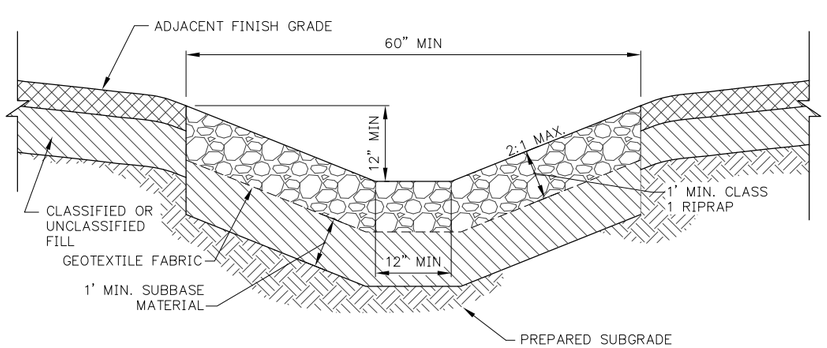

5 ROCK LINED DITCH
Scale: NTS

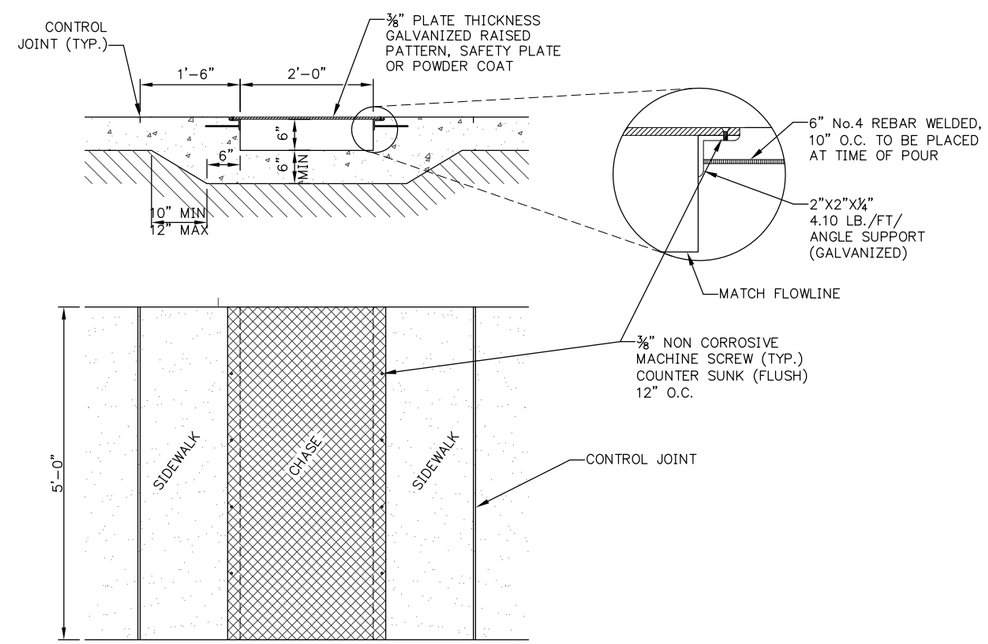

6 WALKWAY CHASE
Scale: NTS

DATE	REVISIONS	INIT

STATE OF ALASKA
49TH
MICAH K. SCHOMING
CE 10568
04-20-09
REGISTERED PROFESSIONAL ENGINEER

ALASKA NATIVE TRIBAL HEALTH CONSORTIUM
DIVISION OF ENVIRONMENTAL HEALTH AND ENGINEERING
1901 Bragaw Street, Suite 200
ANCHORAGE, ALASKA, 99508-3440
(907) 729-3600

ALASKA NATIVE TRIBAL HEALTH CONSORTIUM

McGRATH SUB-REGIONAL HEALTH CENTER
CIVIL DETAILS
100% DESIGN DRAWINGS

DATE: APRIL 2009
DRAWN BY: TSN
CHECKED BY: MS
PROJ MGR: TD
PROJ ENG: MS
TUS ENG:
FILE: MCG-C-DTGEN
LAYOUT: C-501

C-501
SHEET 11 OF 13

USER: TNORD FILE: J:\JOBSDATA\30303.05 MCGRATH HEALTH CENTER\00 CADD\01 WORKING SET\01 CIVIL\MCG-C-DTGENDWG PLOT DATE: 4/20/2009 11:05 AM

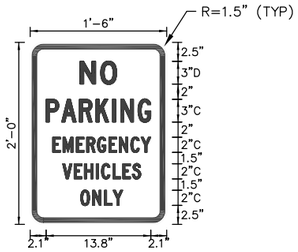

1 SPECIAL SIGN
Scale: NTS

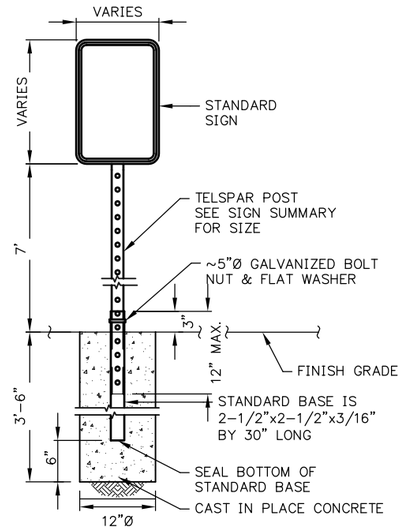

2 SIGN POST DETAIL
Scale: NTS

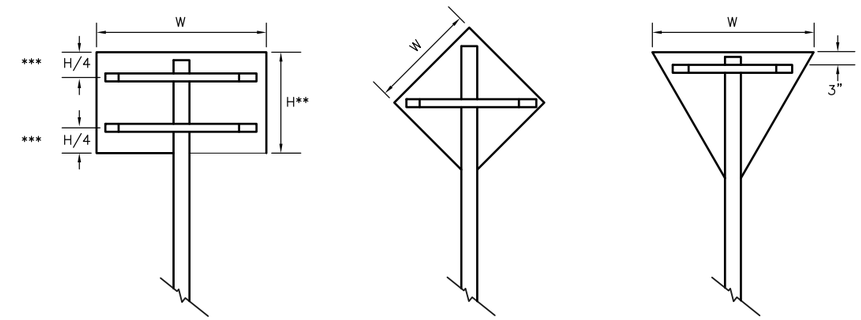

*** USE ONE BRACE WHEN H ≤ 18"
USE TWO BRACES WHEN 18"< H < 48"
USE THREE BRACES WHEN H ≥ 48"

** POSITION OF BRACE MAY BE VARIED TO MATCH PREDRILLED MOUNTING HOLES IN PANEL

3 SIGN BRACING PLACEMENT
Scale: NTS

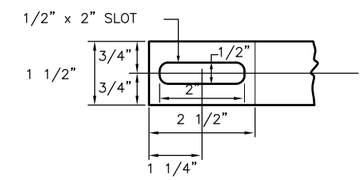

4 DETAIL OF BRACE SLOT
Scale: NTS

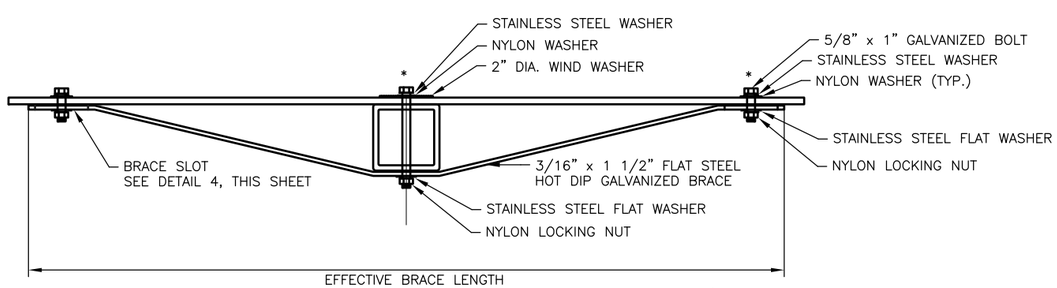

* ADJUST LOCATION OF BRACING SO THAT BOLTS AND WASHERS WILL MISS THE SIGN LEGEND

SIGN WIDTH(W)	EFFECTIVE BRACE LENGTH		
	WARNING	YIELD	OTHER
30"	36"	24"	24"
36"	42"	30"	30"
42"	48"	–	36"
48"	TWO POSTS	36"	42"

< 30" NO BRACING REQUIRED AND USE SQUARE TUBE

5 TUBE POST SIGN BRACING
Scale: NTS

DATE	REVISIONS	INIT

STATE OF ALASKA
49TH
MICAH K. SCHOMING
CE 10568
04-20-09
REGISTERED PROFESSIONAL ENGINEER

ALASKA NATIVE TRIBAL HEALTH CONSORTIUM
DIVISION OF ENVIRONMENTAL HEALTH AND ENGINEERING
1901 Bragaw Street, Suite 200
ANCHORAGE, ALASKA, 99508-3440
(907) 729-3600

ALASKA NATIVE TRIBAL HEALTH CONSORTIUM

McGRATH SUB-REGIONAL HEALTH CENTER
SIGN DETAILS
100% DESIGN DRAWINGS

DATE: APRIL 2009
DRAWN BY: TSN
CHECKED BY: MS
FILE: MCG-C-DTGEN
PROJ MGR: TD
PROJ ENG: MS
TUS ENG:
LAYOUT: C-502

C-502
SHEET 12 OF 13

USER: TNORD FILE: J:\JOBSDATA\30303.05 MCGRATH HEALTH CENTER\00 CADD\01 WORKING SET\01 CIVIL\MCG-C-DTGEN.DWG PLOT DATE: 4/20/2009 11:05 AM

NOTES:
1. SPACE BETWEEN 1"x6" PICKETS IS 3/8".
2. WIDTH OF DOOR MAY VARY SLIGHTLY DUE TO CONTRACTOR SELECTED DOOR HINGE AND THE SPACING REQUIRED FOR PROPER DOOR OPENING.
3. CONTRACTOR TO SUPPLY TWO TRASH ENCLOSURES AS SHOWN. TRASH ENCLOSURES SHALL BE BEARSAVER – MODEL: HA2–P OR APPROVED EQUAL.

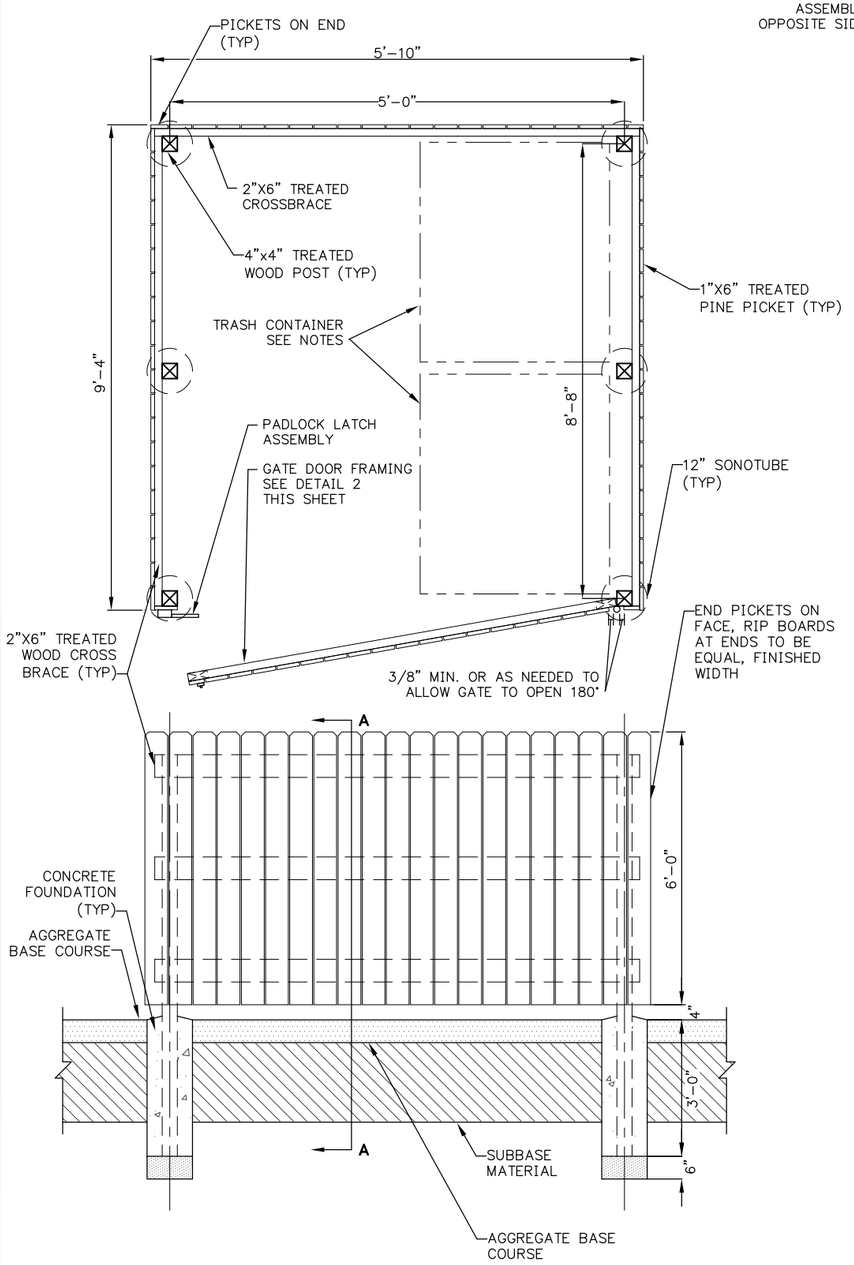

1 **FENCING DETAIL -TRASH RECEPTACLE**
Scale: NTS

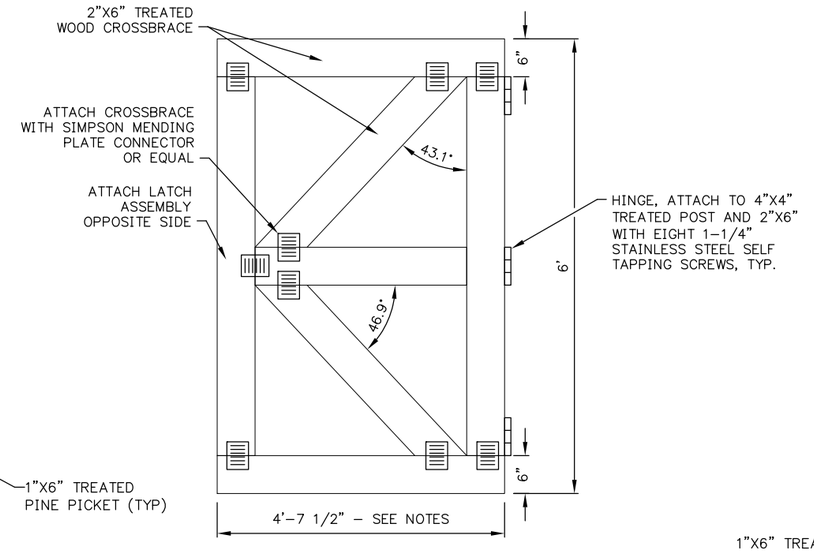

2 **GATE FRAMING DETAIL**
Scale: NTS

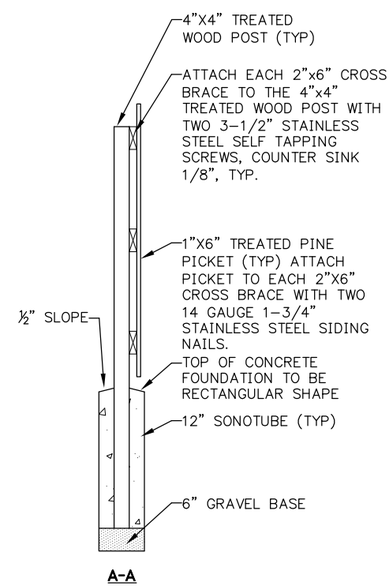

A–A

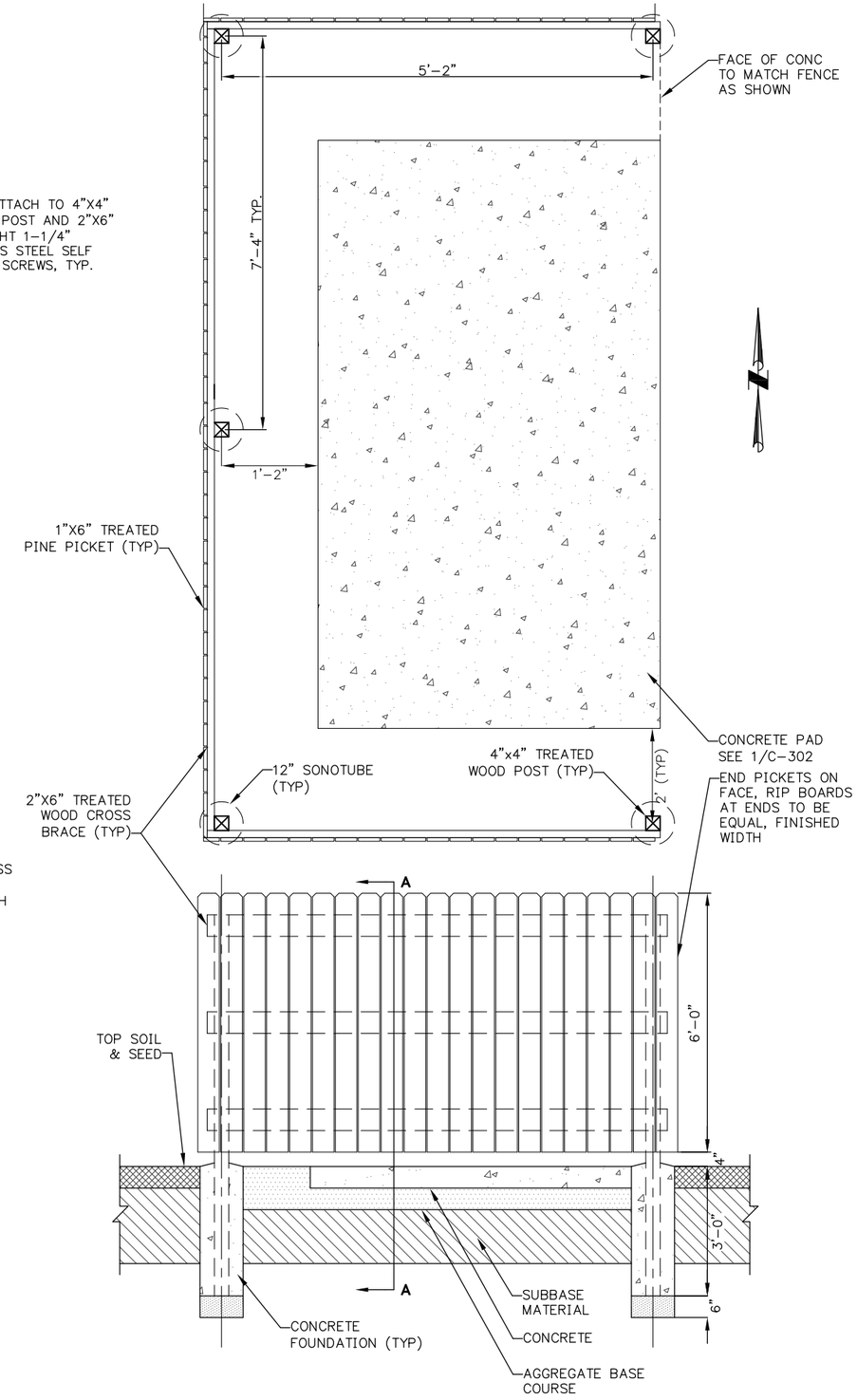

3 **FENCING DETAIL - FUEL TANK**
Scale: NTS

DATE	REVISIONS	INIT

STATE OF ALASKA 49TH MICAH K. SCHOMING CE 10568 04–20–09 REGISTERED PROFESSIONAL ENGINEER

ALASKA NATIVE TRIBAL HEALTH CONSORTIUM
DIVISION OF ENVIRONMENTAL HEALTH AND ENGINEERING
1901 Bragaw Street, Suite 200
ANCHORAGE, ALASKA, 99508–3440
(907) 729–3600

McGRATH SUB–REGIONAL HEALTH CENTER
FENCE AND GATE DETAILS
100% DESIGN DRAWINGS

DATE: APRIL 2009
DRAWN BY: TSN
CHECKED BY: MS
PROJ MGR: TD
PROJ ENG: MS
TUS ENG:
FILE: MCG–C–DTGEN
LAYOUT: C–503

C-503
SHEET 13 OF 13

USER: TNORD FILE: J:\JOBSDATA\30303.05 MCGRATH HEALTH CENTER\00 CADD\01 WORKING SET\01 CIVIL\MCG–C–DTGEN.DWG PLOT DATE: 4/20/2009 11:06 AM

1 / A0.2 ABBREVIATIONS

"	INCH
#	NUMBER
&	AND
@	AT
<	ANGLE
ø	DIAMETER
A.B.	ANCHOR BOLT
A.C.T.	ACOUSTICAL CEILING TILE
A.F.F.	ABOVE FINISH FLOOR
ACOUS.	ACOUSTICAL
ACT.	ACTUAL
ADD.	ADDITION OR ADDENDUM
ADDN.	ADDITIONAL
ALT.	ALTERNATE
ALUM.	ALUMINUM
ANDD.	ANODIZED
APPROX.	APPROXIMATE
ARCH.	ARCHITECTURAL
ASB.	ASBESTOS
ASPH.	ASPHALT
AUTO. DR.	AUTOMATIC DOOR
AVG.	AVERAGE
B.C.	BASE CABINET
B.M.	BENCH MARK
B.O.	BOTTOM OF
B.S.	BOTH SIDES
B.T.U.	BRITISH THERMAL UNIT
B.U.R.	BUILT-UP ROOFING
BK.	BACK
BLDG.	BUILDING
BLK.	BLOCK
BLKG.	BLOCKING
BM.	BEAM
BOTT.	BOTTOM
C TO C	CENTER TO CENTER
C.B.	CATCH BASIN
C.I	CAST IRON
C.I.P.	CAST IRON PIPE
C.J.	CONTROL JOINT
C.M.P.	CORRUGATED METAL PIPE
C.M.U.	CONCRETE MASONRY UNITS
C.R.	COLD ROLLED
C.R.C.	COLD ROLLED CHANNEL
C.T.	CERAMIC TILE
CAB.	CABINET
CEM.	CEMENT
CER.	CERAMIC
CH.B.	CHALK BOARD
CIRC.	CIRCULAR
CL.	CENTER LINE
CLG.	CEILING
CLKG.	CAULKING
CLOS.	CLOSET
CLR.	CLEAR
COL.	COLUMN
COMM.	COMMUNICATION
COMP.	COMPOSITION
CONC.	CONCRETE
CONN.	CONNECTION
CONST.	CONSTRUCTION
CONT.	CONTINUOUS
CORR.	CORRIDOR
CPT.	CARPET
CSK.	COUNTERSUNK
CSMT.	CASEMENT
CTD.	COATED
CTR.	CENTER
CU.	CUBIC
CVR'G	COVERING
D.B.	DRAWER BANK
D.F.	DRINKING FOUNTAIN
D.L.	DEAD LOAD
DBL.	DOUBLE
DEMO.	DEMOLITION
DEPT.	DEPARTMENT
DIA.	DIAMETER
DIAG.	DIAGONAL
DIFF.	DIFFUSER OR DIFFERENCE
DIM.	DIMENSION
DISP.	DISPENSER
DK.	DECK
DN.	DOWN
DR.	DOOR
DS.	DOWN SPOUT
DTL.	DETAIL
DWG.	DRAWING
E.	EAST
E.I.F.S.	EXT INSULATION & FINISH SYS
E.S.	EACH SIDE
E.W.	EACH WAY
EA.	EACH
ELECT.	ELECTRICAL
ELEV.	ELEVATION
ENCL.	ENCLOSURE
EQ.	EQUAL
EQUIP.	EQUIPMENT
EXIST.	EXISTING
EXP.	EXPANSION
EXP. AGG.	EXPOSED AGGREGATE
EXP. JT.	EXPANSION JOINT
EXT.	EXTERIOR
EXTR.	EXTRUDED
F TO F	FACE TO FACE
F.B.	FLAT BAR
F.D.	FLOOR DRAIN
F.E.	FIRE EXTINGUISHER
F.E.C.	FIRE EXTINGUISHER CABINET
F.F.	FACTORY FINISH
F.F.E.	FINISHED FLOOR ELEVATION
F.H.C.	FIRE HOSE CABINET
F.L.	FLOOR LINE
F.O.	FACE OF
F.O.B.	FACE OF BLOCK
F.O.BLDG.	FACE OF BUILDING
F.O.C.	FACE OF CONCRETE
F.O.F.	FACE OF FINISH
F.O.S.	FACE OF STUDS
F.O.W.	FACE OF WALL
F.P.	FIRE PROOF
F.S.	FULL SIZE
F.T.	FIRE TREATED
FAB.	FABRICATED
FDN.	FOUNDATION
FIG.	FIGURE
FIN.	FINISH
FIN. FL.	FINISH FLOOR
FLR.	FLOOR
FLSH.	FLASHING
FLUOR.	FLUORESCENT
FRPF.	FIREPROOFING
FRT.	FIRE RETARDANT TREATED
FT.	FOOT
FTG.	FOOTING
FURR.	FURRING
FUT.	FUTURE
G.A.	GYPSUM ASSOCIATION
G.B.	GRAB BAR
G.I.	GALVANIZED IRON
G.W.B.	GYPSUM WALL BOARD
GA.	GAUGE
GAL.	GALLON
GALV.	GALVANIZED
GL.	GLASS
GLB.	GLUE LAMINATED BEAM
GOV'T.	GOVERNMENT
GR.	GRADE
GSP.	GALVANIZED STEEL PIPE
GYM.	GYMNASIUM
GWB	GYPSUM WALL BOARD
H.B.	HOSE BIB
H.C.	HANDICAPPED
H.C.	HOLLOW CORE
H.M.	HOLLOW METAL
H.M.F.	HOLLOW METAL FRAME
H.P.	HIGH POINT
H.W.	HOT WATER
HD.	HAND
HDWD.	HARDWOOD
HDWR.	HARDWARE
HORIZ.	HORIZONTAL
HR.	HOUR
HT.	HEIGHT
HWY.	HIGHWAY
I.D.	INSIDE DIAMETER
IN.	INCH
INCL.	INCLUDE
INSUL.	INSULATE
INT.	INTERIOR
JAN.	JANITOR
JT.	JOINT
KIT.	KITCHEN
L.L.	LIVE LOAD
L.P.	LOW POINT
LAB.	LABORATORY
LAM.	LAMINATE
LAV.	LAVATORY
LB.	POUND
LBR.	LUMBER
LG.	LONG OR LENGTH
LH.	LEFT HAND
LKRS.	LOCKERS
LT.	LEFT
M.	MINUTE
M.C.	MEDICINE CABINET
M.O.	MASONRY OPENING
MAT'L.	MATERIAL
MAX.	MAXIMUM
MECH.	MECHANICAL
MEMB.	MEMBRANE
MFG.	MANUFACTURE
MH.	MANHOLE
MIN.	MINIMUM OR MINUTE
MIR.	MIRROR
MISC.	MISCELLANEOUS
MTL.	METAL
MULL.	MULLION
MWP.	MEMBRANE WATER PROOFING
N	NORTH
N.A.	NOT APPLICABLE
N.I.C.	NOT IN CONTRACT
N.T.S.	NOT TO SCALE
NO.	NUMBER
NOM.	NOMINAL
O.C.	ON CENTER
O.H.	OVER HEAD
OFF.	OFFICE
OHD.	OVER HEAD DOOR
OPNG.	OPENING
OPP.	OPPOSITE
ORIG.	ORIGINAL
P.LAM.	PLASTIC LAMINATE
P.T.D.	PAPER TOWER DISPENSER
PART.	PARTITION
PL.	PLATE
PLAST.	PLASTER
PLYWD.	PLYWOOD
PR.	PAIR
PRE. ENG.	PREVIOUSLY ENGINEERED
PREFAB.	PREFABRICATED
PROJ.	PROJECT
PSF.	POUNDS PER SQUARE FOOT
PT.	POINT
Q.T.	QUARRY TILE
R.	RISER
RCP	REFLECTED CEILING PLAN
R.D.	ROOF DRAIN
R.H.	RIGHT HAND
R.L.	RAIL LEADER
R.O.	ROUGH OPENING
R.O.W.	RIGHT OF WAY
RAD.	RADIUS
RBR.	RUBBER
REF.	REFERENCE
REFR.	REFRIGERATOR
REINF.	REINFORCED
REQ.	REQUIRED
RESIL.	RESILIENT
REV.	REVERSED
RGH.	ROUGH
RM.	ROOM
RT.	RIGHT
S.	SOUTH
S.A.T.	SUSPENDED ACOUSTICAL TILE
S.B.	SINK BASE
S.C.	SOLID CORE
S.C.W.	SOLID CORE WOOD
S.D.	SMOKE DETECTOR
S.S.	SANITARY SEWER
SAN.	SANITARY
SCHED.	SCHEDULED
SD.	SIDE
SDG.	SIDING
SECT.	SECTION
SHEATH.	SHEATHING
SHT.	SHEET
SHWR.	SHOWER
SIM.	SIMILAR
SPEC.	SPECIFICATIONS.
SPL.	SPECIAL
SQ.	SQUARE
SQ. FT.	SQUARE FEET
SST.	STAINLESS STEEL
ST.S.	STORM SEWER
STA.	STATION
STD.	STANDARD
STL.	STEEL
STOR.	STORAGE
STRUCT.	STRUCTURE
SUR.	SURFACE
SUSP.	SUSPENDED
SV.	SHEET VINYL
SYM.	SYMMETRICAL
T.&G.	TONGUE AND GROOVE
T.B.	TOWER BAR
T.BD.	TACK BOARD
T.I.	TENANT IMPROVEMENT
T.O.	TOP OF
T.O.C.	TOP OF CURB
T.O.S.	TOP OF STEEL
TEL.	TELEPHONE
TEMP.	TEMPORARY
TERR.	TERRAZZO
THK.	THICK
THRU.	THROUGH
TRANSV.	TRANSVERSE
TS.	TUBE STEEL
TV.	TELEVISION
TYP.	TYPICAL
U.L.	UNDERWRITERS LABORATORIES
U.O.N.	UNLESS OTHERWISE NOTED
UNFIN.	UNFINISHED
V.B.	VAPOR BARRIER
V.C.T.	VINYL COMPOSITION TILE
V.I.F.	VERIFY IN FIELD
V.T.	VINYL TILE
VAC.	VACUUM
VERT.	VERTICAL
VEST.	VESTIBULE
VFY.	VERIFY
W.	WEST
W.C.	WATER CLOSET
W.P.	WATER PROOF
W.W.F.	WELDED WIRE FABRIC
W.W.M.	WELDED WIRE MESH
W/	WITH
W/O	WITHOUT
WD.	WOOD
WT.	WEIGHT
WTH.	WIDTH

2 / A0.2 DRAWING SYMBOLS

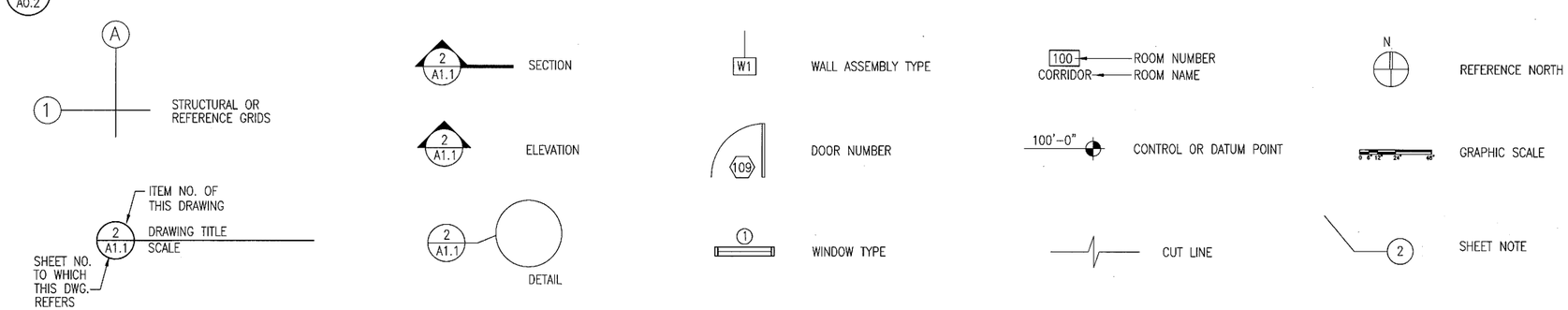

3 / A0.2 GENERAL NOTES

SUMMARY OF WORK:

THE SCOPE OF WORK SHOWN IN THE CONTRACT DOCUMENTS ADDRESSES THE WORK REQUIRED TO COMPLETE THE NEW CONSTRUCTION OF A HEALTH CLINIC FOR THE VILLAGE OF MCGRATH, ALASKA.

1. ALL WORK SHALL BE PERFORMED IN ACCORDANCE WITH THE MOST RECENT ADOPTED EDITION OF THE INTERNATIONAL BUILDING CODE, NFPA, JCAHO, INTERNATIONAL MECHANICAL CODE, NATIONAL ELECTRICAL CODE, UNIFORM PLUMBING CODE AND ALL LOCAL AND ALASKA STATE CODE REGULATIONS AND AMENDMENTS.
2. THESE DRAWINGS ARE SUPPLIED TO THE GENERAL CONTRACTOR AND OTHERS FOR THEIR USE ON THIS SPECIFIC PROJECT. ALL COPIES OF THESE DRAWINGS SHALL REMAIN THE PROPERTY OF ANTHC AND SHALL NOT BE RE-USED OR REPRODUCED WITHOUT PERMISSION FROM ANTHC.
3. THE ORGANIZATION OF THESE DRAWINGS IS NOT INTENTED TO CONTROL THE DIVISION OF WORK AMONG SUB-CONTRACTORS. THE DIVISION OF THE WORK SHALL BE THE SOLE RESPONSIBILITY OF THE GENERAL CONTRACTOR.
4. CONTRACTORS ARE RESPONSIBLE FOR CONFORMING TO ALL APPLICABLE LOCAL CODES AND TRADE STANDARDS.
5. CONTRACTORS SHALL TAKE ALL NECESSARY PRECAUTIONARY MEASURES TO PROTECT THE PUBLIC AND ADJACENT PROPERTIES FROM DAMAGE THROUGHOUT CONSTRUCTION. CONTRACTOR ASSUMES ALL LIABILITY FOR DAMAGES INCURRED DURING CONSTRUCTION.
6. CONTRACTOR SHALL PROVIDE ALL LABOR, EQUIPMENT AND MATERIALS REQUIRED TO COMPLETE ALL WORK AS SHOWN OR AS IMPLIED ON THESE DRAWINGS.
7. CONTRACTOR SHALL PROVIDE AND MAINTAIN ALL FACILITIES FOR LIGHT, HEAT AND POWER WITHIN THE PREMISES AND IN THE CONSTRUCTION AREA DURING THE ENTIRE CONSTRUCTION PERIOD. PROVIDE NECESSARY MATERIALS AND LABOR FOR POWER CONNECTIONS FOR MACHINES, PORTABLE, ETC. AS USED BY OTHER TRADES, REGARDLESS OF SIZE.
8. CONTRACTOR SHALL VERIFY ALL DIMENSIONS AND CONDITIONS IN THE FIELD PRIOR TO CONSTRUCTION. IF A CONDITION NOT COVERED IN THE DRAWINGS IS ENCOUNTERED, OR IF A DIMENSIONAL ERROR IS FOUND, THE CONTRACTOR SHALL NOTIFY THE ARCHITECT BEFORE COMMENCING WITH THAT PORTION OF THE WORK.
9. ALL COMPONENTS, EQUIPMENT, ETC., SHALL BE INSTALLED PER MANUFACTURERS PRINTED RECOMMENDATIONS
10. CONTRACTOR SHALL BE RESPONSIBLE FOR THE REMOVAL OF ALL RUBBISH AND DEBRIS RESULTING FROM CONSTRUCTION.
11. ALL COLOR SELECTION SHALL BE PER THE COLOR SCHEDULE OR IF NOT ON THE COLOR SCHEDULE THEN SUBMIT TO THE CONTRACTING OFFICER FOR APPROVAL.
12. ALL DIMENSIONS ARE TO FACE OF STUDS, FACE OF PANEL SHEATHING, GRID LINES, FACE OF ROUGH OPENING, UNLESS INDICATED OTHERWISE.
13. CAULK ALL JOINTS, PROVIDE BACKER ROD AS NEEDED, AND PROVIDE FLASHING AND COUNTER FLASHING AS NEEDED TO PROVIDE COMPLETE WEATHER PROOF INSTALLATION.

INIT.	REVISIONS	DATE

STATE OF ALASKA 49TH WILLIAM A. KLUGE 46301 REGISTERED PROFESSIONAL ARCHITECT
4.20 2009

ALASKA NATIVE TRIBAL HEALTH CONSORTIUM

DIVISION OF ENVIRONMENTAL HEALTH AND ENGINEERING
1901 SOUTH BRAGAW STREET, SUITE 200
ANCHORAGE, ALASKA, 99508-3440
(907) 729-3600

ALASKA NATIVE TRIBAL HEALTH CONSORTIUM

McGRATH SUB-REGIONAL HEALTH CENTER
ABBREVIATIONS, GENERAL NOTES & DRAWING SYMBOLS

DATE: 4/20/2009
SCALE: AS NOTED
DRAWN BY: CFP
FILE NAME:
PROJECT NO: 0198
PROJ ARCH: BK

DENALI COMMISSION ALASKA

SHEET A-001

LEGEND

SYMBOL	DETAIL	DESCRIPTION
	4 / A101	(7)10'–12' NATIVE BIRCH
	3 / A101	(6)6' NATIVE SPRUCE
		4" MIN TOPSOIL W/ KENTUCKY BLUE GRASS SEED @ ALL DISTURBED AREAS. REFER TO CIVIL DRAWINGS FOR THE EXTEND OF CLEARING LIMITS.

PARKING (22) TOTAL PARKING SPACES
(2) ADA ACCESSIBLE SPACES

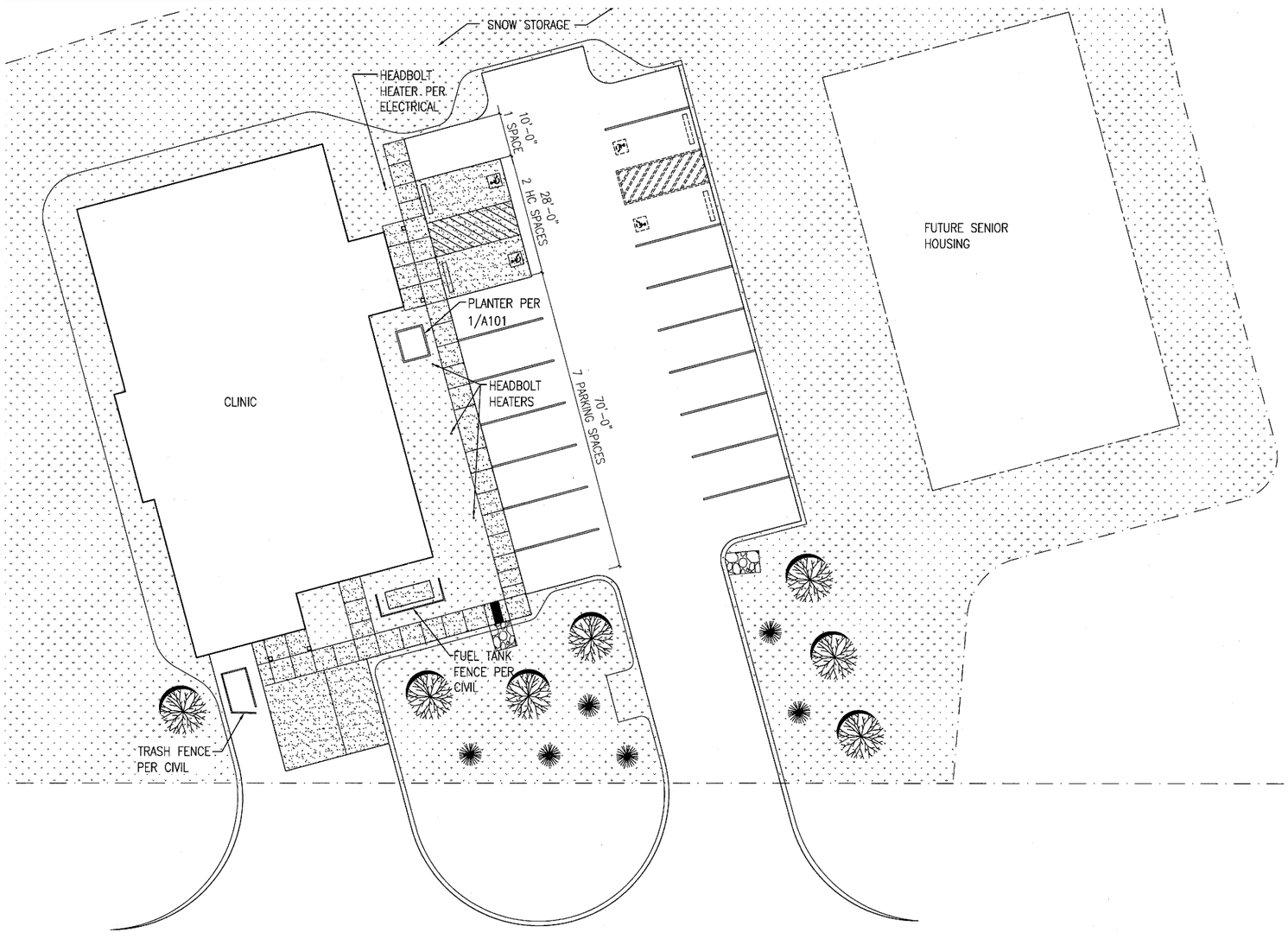

2 SITE PLAN

GRAPHIC SCALE: 10' 20' 30'

TOTAL BUILDING AREA: 6,113 S.F.

REF. N E S W

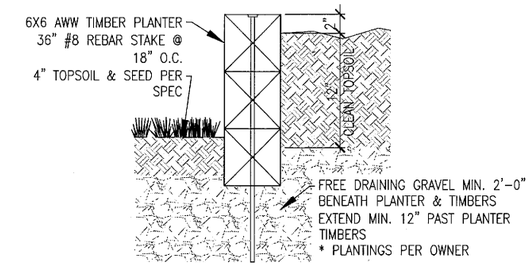

1 PLANTER DETAIL

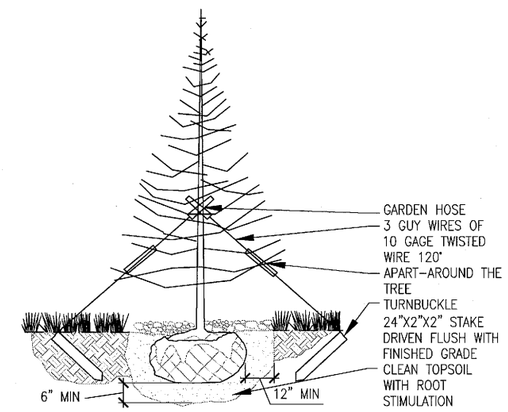

3 EVERGREEN PLANTING DETAIL

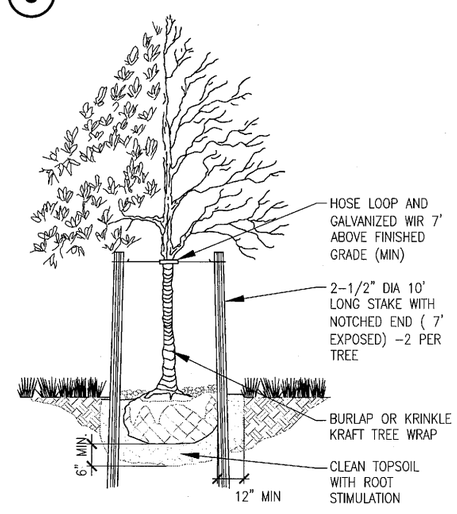

4 DECIDUOUS PLANTING DETAIL

DATE	REVISIONS	INIT.

STATE OF ALASKA 49TH WILLIAM A. KLUGE A6301 REGISTERED PROFESSIONAL ARCHITECT
4.20 2009

ALASKA NATIVE TRIBAL HEALTH CONSORTIUM

DIVISION OF ENVIRONMENTAL HEALTH AND ENGINEERING
1901 SOUTH BRAGAW STREET, SUITE 200
ANCHORAGE, ALASKA, 99508–3440
(907) 729–3600

ALASKA NATIVE TRIBAL HEALTH CONSORTIUM

McGRATH SUB–REGIONAL HEALTH CENTER
SITE PLAN

DATE: 4/20/2009
SCALE: AS NOTED
DRAWN BY: CFP
FILE NAME:
PROJECT NO: 0198
PROJ ARCH. BK

SHEET A–101

2 OF 13A

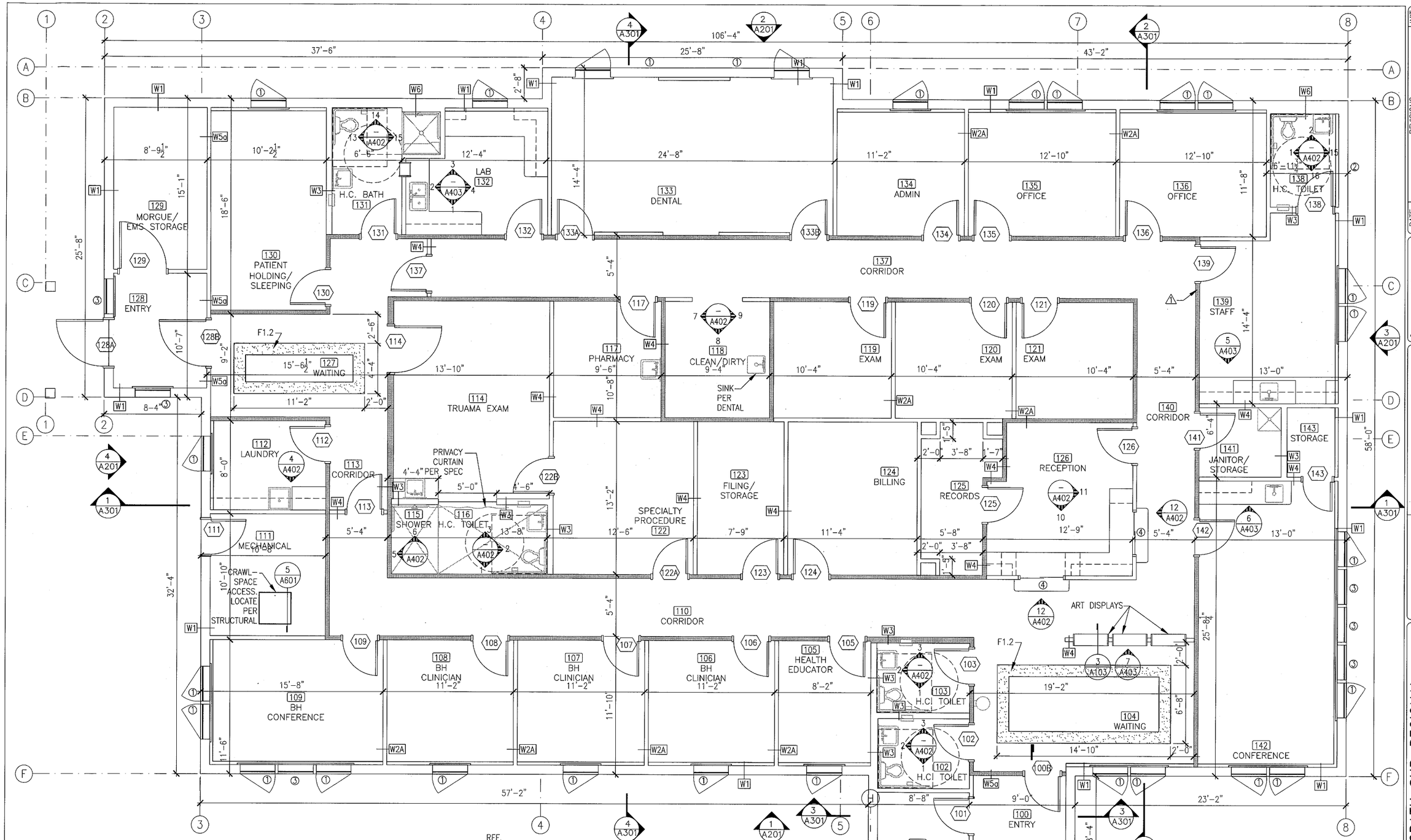

1 A102 **FLOOR PLAN** Total Floor Area: 6,113 S.F.

GRAPHIC: 2' 4' 6' / 1' 3' 5'

NOTES

1. ALL AREAS WITHIN CORRIDOR SIDE OF SHADED WALLS SHALL RECEIVE TWO LAYERS OF 5/8" TYPE X GWB ON THE BOTTOM OF THE ROOF TRUSSES. ALL CORRIDORS SHALL BE 1 HOUR RATED.
2. ALL WALLS SHALL BE W2 WALL TYPE UNLESS NOTED OTHERWISE PER A-102.
3. ALL WALL TYPE CONSTRUCTIONS SHALL EXTEND FROM FINISH FLOOR TO BOTTOM OF ROOF TRUSSES.

INIT.	REVISIONS	DATE

STATE OF ALASKA 49TH WILLIAM A. KLUGE A6301 REGISTERED PROFESSIONAL ARCHITECT 4-20-2009

ALASKA NATIVE TRIBAL HEALTH CONSORTIUM

DIVISION OF ENVIRONMENTAL HEALTH AND ENGINEERING
1901 SOUTH BRAGAW STREET, SUITE 200
ANCHORAGE, ALASKA 99508-3440
(907) 729-3600

McGRATH SUB-REGIONAL HEALTH CENTER

FLOOR PLAN

FILE NAME:
PROJECT NO: 0198
PROJ ARCH. BK

DATE: 4/20/2009
SCALE: AS NOTED
DRAWN BY: CFP

SHEET A-102

1 A103 REFLECTED CEILING PLAN

GRAPHIC: 0 1' 2' 4' 8'

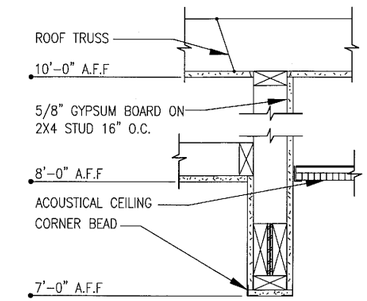

2 A103 BULK HEAD DETAIL

GRAPHIC: 1" 1" 3" 6" 1" 2"

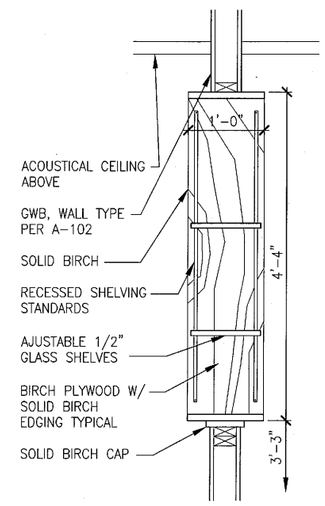

3 A103 ART DISPLAY DETAIL

GRAPHIC: 1" 6" 1'-6" 3" 1'

RCP LEGEND

- 2x2 SUSP. ACOUSTIC TILE CEILING AT 8'-0" AFF.
- 5/8" TYPE X GWB CEILING ON AT 8'-0", UNLESS OTHERWISE NOTED
- EXHAUST FAN OR RETURN
- MECHANICAL DIFFUSER
- 2x4 RECESSED FLUORESCENT FIXTURE
- 1x4 SURFACE MTD FLUORESCENT FIXTURE
- SURFACE MTD FIXTURE
- WALL MTD FUORESCENT FIXTURE
- EXIT FIXTURE
- EMERGENCY FIXTURE
- 22"x30" ATTIC ACCESS SEE DETAIL 2/A601

CEILING NOTES

1. REFERENCE ELECTRICAL DRAWINGS FOR ALL SIZES AND TYPES OF LIGHTING FIXTURES, AND COORDINATE LOCATION.

2. REFERENCE MECHANICAL DRAWINGS FOR ALL SIZES AND TYPES OF FIXTURES, AND COORDINATE LOCATION.

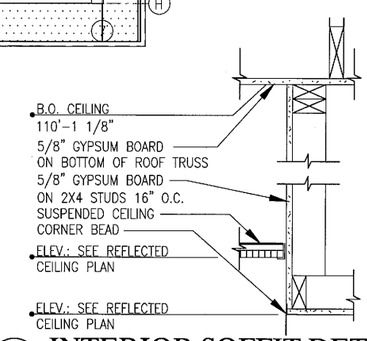

5 A103 INTERIOR SOFFIT DETAIL

GRAPHIC: 1" 1" 3" 6" 1" 2"

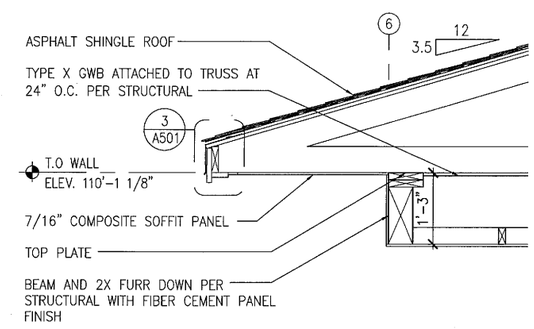

4 A103 SOFFIT DETAIL

GRAPHIC: 1" 4" 12" 24" 2" 6"

DENALI COMMISSION ALASKA

INIT.	REVISIONS	DATE

STATE OF ALASKA 49TH WILLIAM A. KLUGE A6301 REGISTERED PROFESSIONAL ARCHITECT 4.20 2009

ALASKA NATIVE TRIBAL HEALTH CONSORTIUM

DIVISION OF ENVIRONMENTAL HEALTH AND ENGINEERING
1901 SOUTH BRAGAW STREET, SUITE 200
ANCHORAGE, ALASKA, 99508-3440
(907) 729-3600

McGRATH SUB-REGIONAL HEALTH CENTER
REFLECTED CEILING PLAN

FILE NAME:
PROJECT NO: 0198
PROJ ARCH. BK
DATE: 4/20/2009
SCALE: AS NOTED
DRAWN BY: CFP CFP

SHEET A-103

4 OF 13A

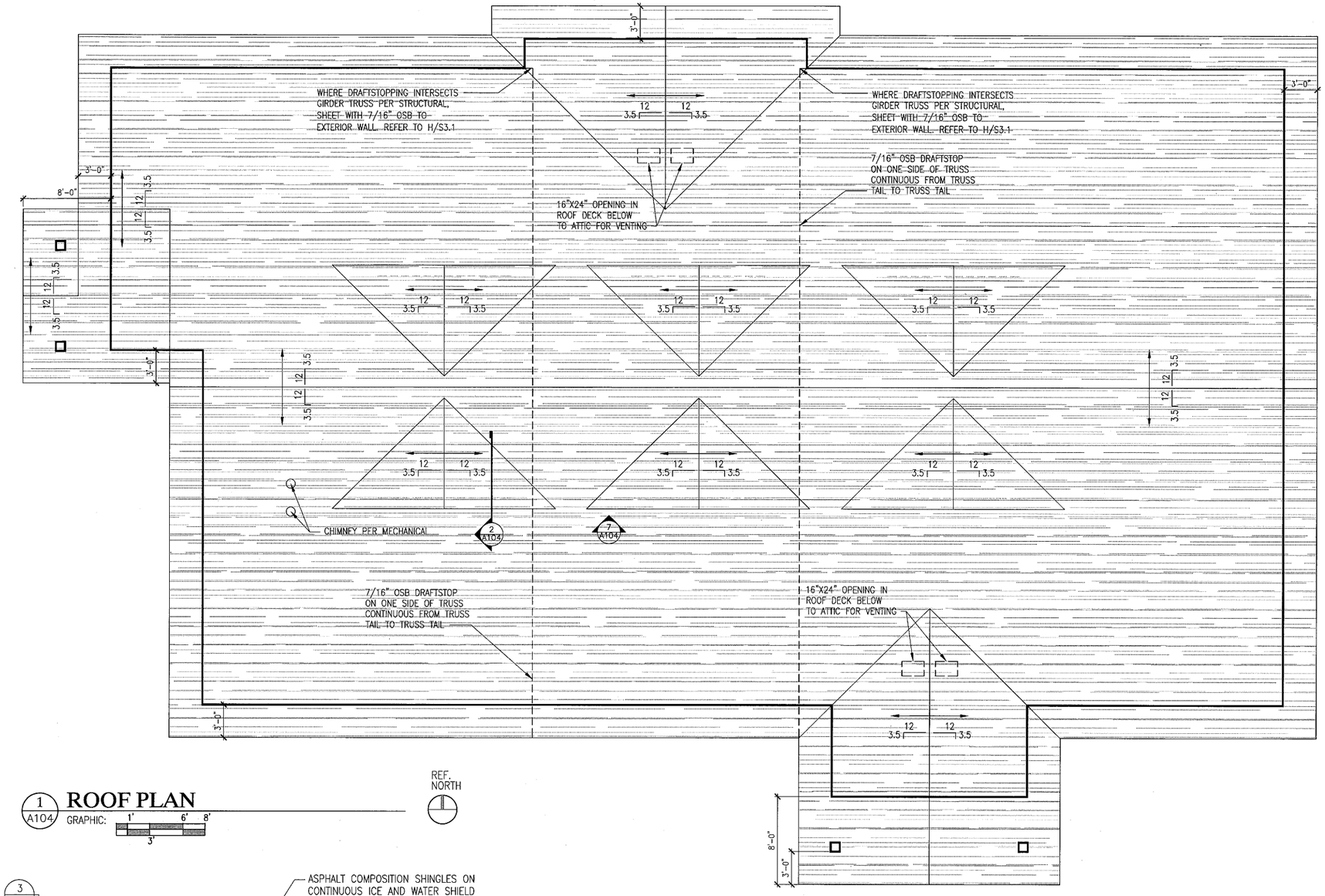

1 A104 **ROOF PLAN**

GRAPHIC: 1' 6' 8' 3'

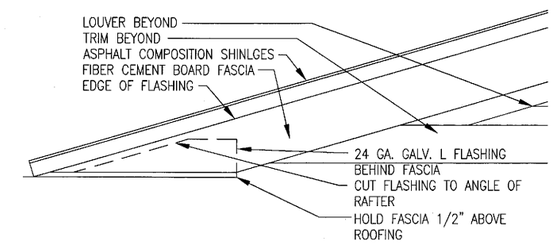

7 A104 **DORMER DETAIL**

GRAPHIC: 1" 1" 3" 6" 2" 2"

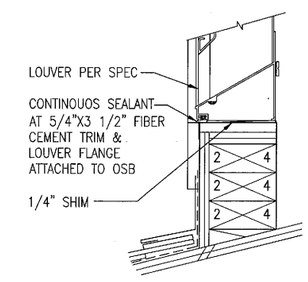

6 A104 **LOUVER DETAIL**

GRAPHIC: 1" 1" 3" 6" 2" 2"

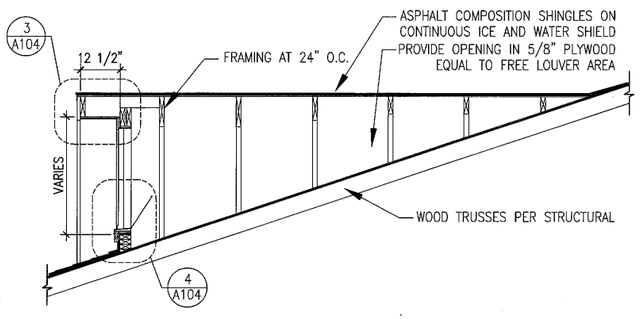

2 A104 **LOUVER DETAIL**

GRAPHIC: 1"6" 1' 2' 3' 3" 9"

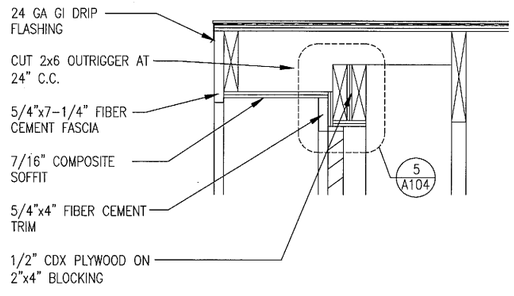

3 A104 **LOUVER DETAIL**

GRAPHIC: 2" 2" 6" 12" 1" 3"

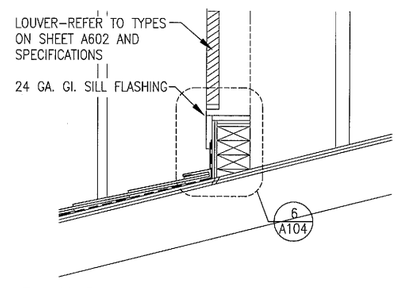

4 A104 **LOUVER DETAIL**

GRAPHIC: 2" 2" 6" 12" 1" 3"

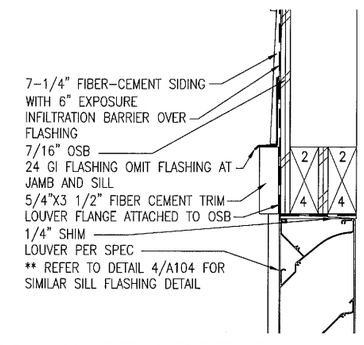

5 A104 **LOUVER DETAIL**

GRAPHIC: 1" 1" 3" 6" 2" 2"

DENALI COMMISSION ALASKA

DATE	REVISIONS	INIT.

STATE OF ALASKA 49TH WILLIAM A. KLUGE A6301 REGISTERED PROFESSIONAL ARCHITECT
4.20 2009

ALASKA NATIVE TRIBAL HEALTH CONSORTIUM

DIVISION OF ENVIRONMENTAL HEALTH AND ENGINEERING
1901 SOUTH BRAGAW STREET, SUITE 200
ANCHORAGE, ALASKA, 99508-3440
(907) 729-3600

ALASKA NATIVE TRIBAL HEALTH CONSORTIUM

McGRATH SUB-REGIONAL HEALTH CENTER
ROOF PLAN

FILE NAME:
PROJECT NO: 0198
PROJ ARCH. BK

DATE: 4/20/2009
SCALE: AS NOTED
DRAWN BY: CFP

SHEET A-104

5 OF 13A

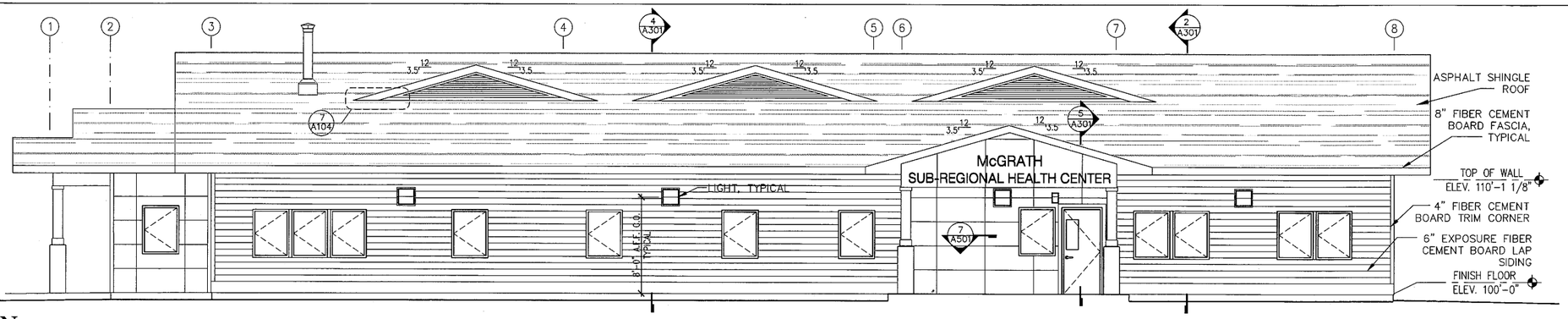

1 A201 FRONT ELEVATION

GRAPHIC: 1' 6' 8' 3'

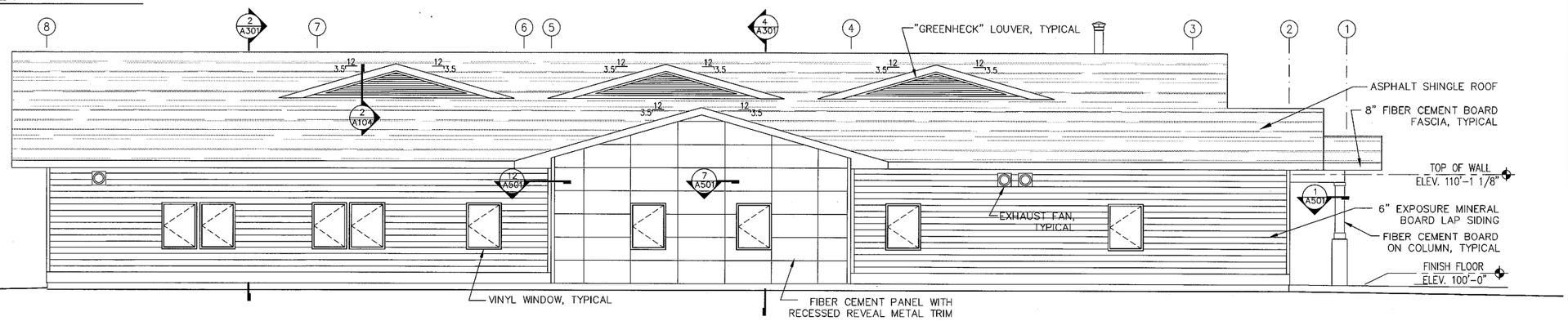

2 A201 BACK ELEVATION

GRAPHIC: 1' 6' 8' 3'

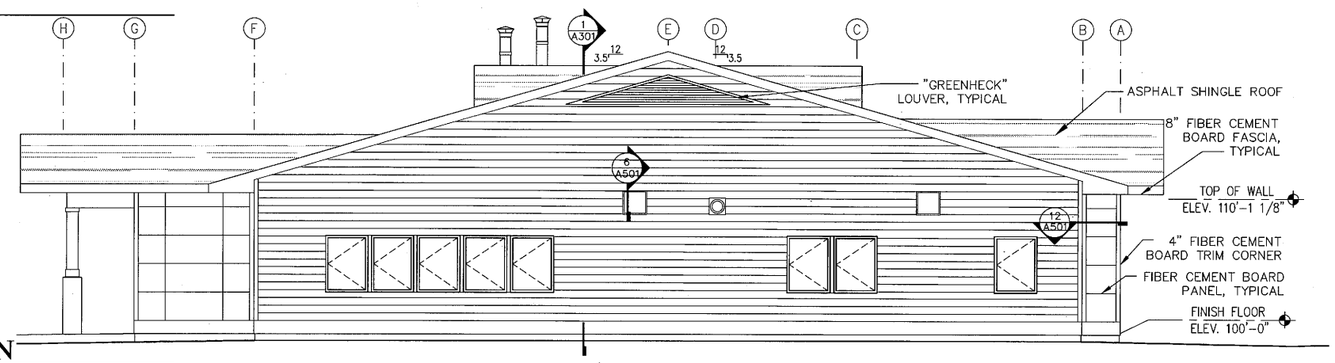

3 A201 RIGHT ELEVATION

GRAPHIC: 1' 6' 8' 3'

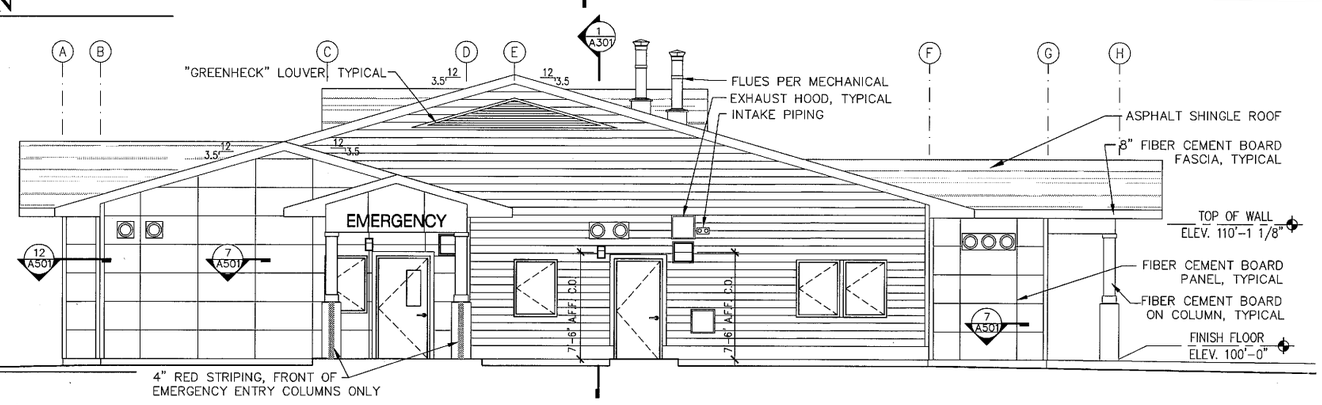

4 A201 LEFT ELEVATION

GRAPHIC: 1' 6' 8' 3'

GENERAL NOTES

1. ARCHITECTURAL DRAWING'S FINISH FLOOR HEIGHT IS SET AT 100'-0" FOR CONVIENCE. CIVIL FINISH FLOOR IS SET AT A DIFFERENT DATUM.

INIT.	REVISIONS	DATE

STATE OF ALASKA 49TH WILLIAM A. KLUGE A6301 REGISTERED PROFESSIONAL ARCHITECT 4.20 2009

ALASKA NATIVE TRIBAL HEALTH CONSORTIUM

DIVISION OF ENVIRONMENTAL HEALTH AND ENGINEERING
1901 SOUTH BRAGAW STREET, SUITE 200
ANCHORAGE, ALASKA, 99508-3440
(907) 729-3600

McGRATH SUB-REGIONAL HEALTH CENTER
EXTERIOR ELEVATIONS

DATE: 4/20/2009
SCALE: AS NOTED
DRAWN BY: CFP

FILE NAME:
PROJECT NO: 0198
PROJ ARCH. BK

SHEET A-201

6 OF 13A

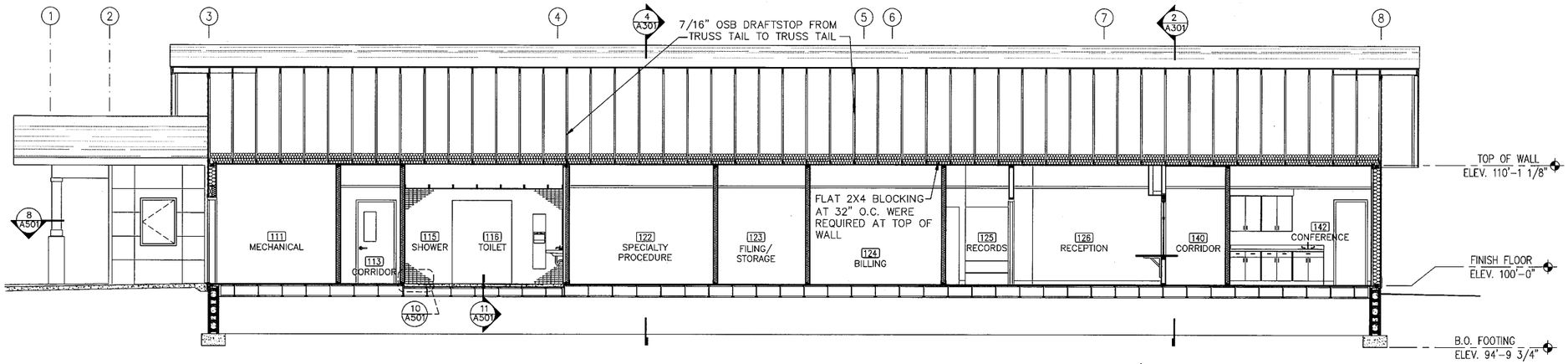

1 A301 **BUILDING SECTION**

GRAPHIC: 1' 6' 8' 3'

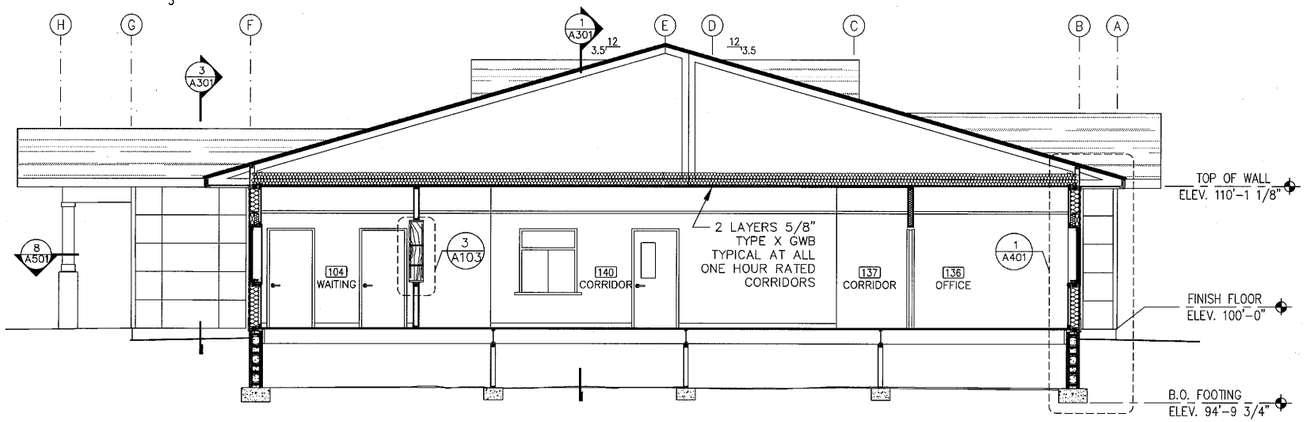

2 A301 **BUILDING SECTION**

GRAPHIC: 1' 6' 8' 3'

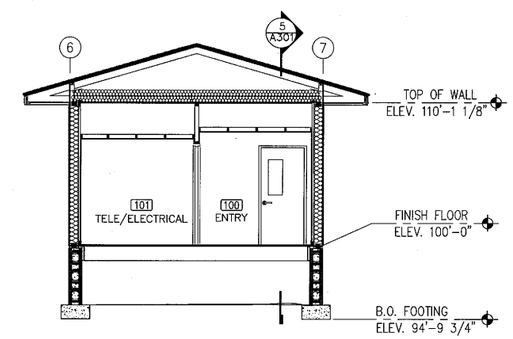

3 A301 **BUILDING SECTION**

GRAPHIC: 1' 6' 8' 3'

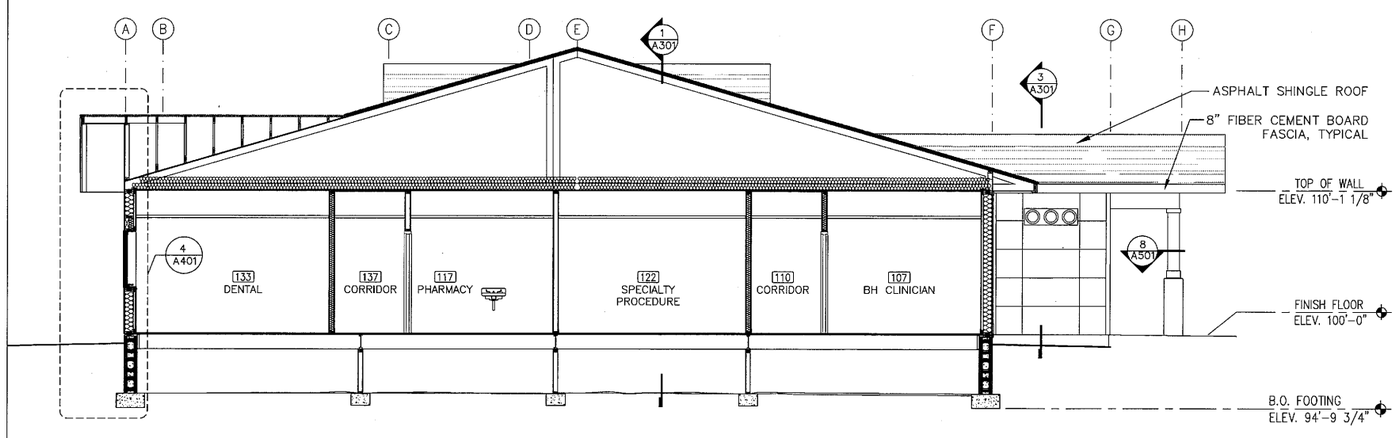

4 A301 **BUILDING SECTION**

GRAPHIC: 1' 6' 8' 3'

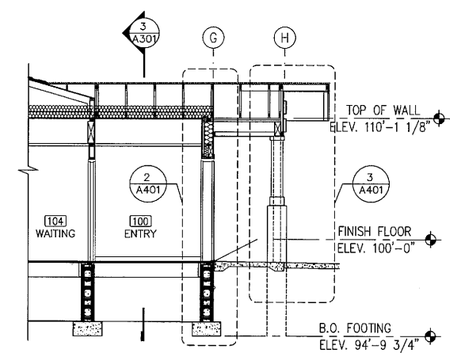

5 A301 **BUILDING SECTION**

GRAPHIC: 1' 6' 8' 3'

DENALI COMMISSION ALASKA

DATE	REVISIONS	INIT.

STATE OF ALASKA 49TH WILLIAM A. KLUGE A6301 REGISTERED PROFESSIONAL ARCHITECT 4.20.2009

ALASKA NATIVE TRIBAL HEALTH CONSORTIUM

DIVISION OF ENVIRONMENTAL HEALTH AND ENGINEERING
1901 SOUTH BRAGAW STREET, SUITE 200
ANCHORAGE, ALASKA, 99508-3440
(907) 729-3600

ALASKA NATIVE TRIBAL HEALTH CONSORTIUM

McGRATH SUB-REGIONAL HEALTH CENTER
BUILDING SECTIONS

DATE: 4/20/2009
SCALE: AS NOTED
DRAWN BY: CFP

FILE NAME:
PROJECT NO: 0198
PROJ ARCH. BK

SHEET A-301

7 OF 13A

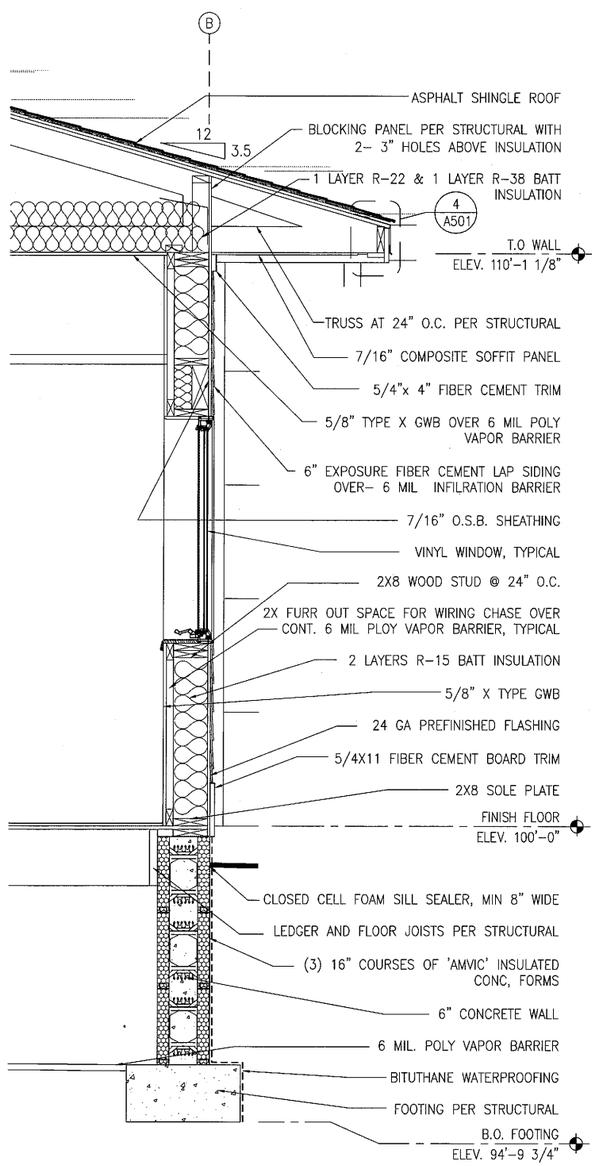

1 A401 **WALL SECTION**

GRAPHIC: 1" 4" 12" 24" 2" 6"

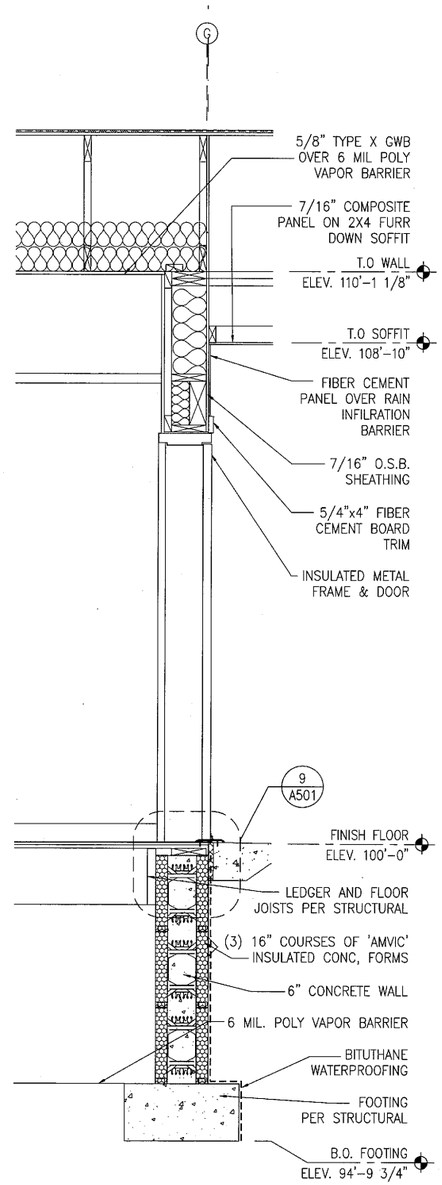

2 A401 **WALL SECTION**

GRAPHIC: 1" 4" 12" 24" 2" 6"

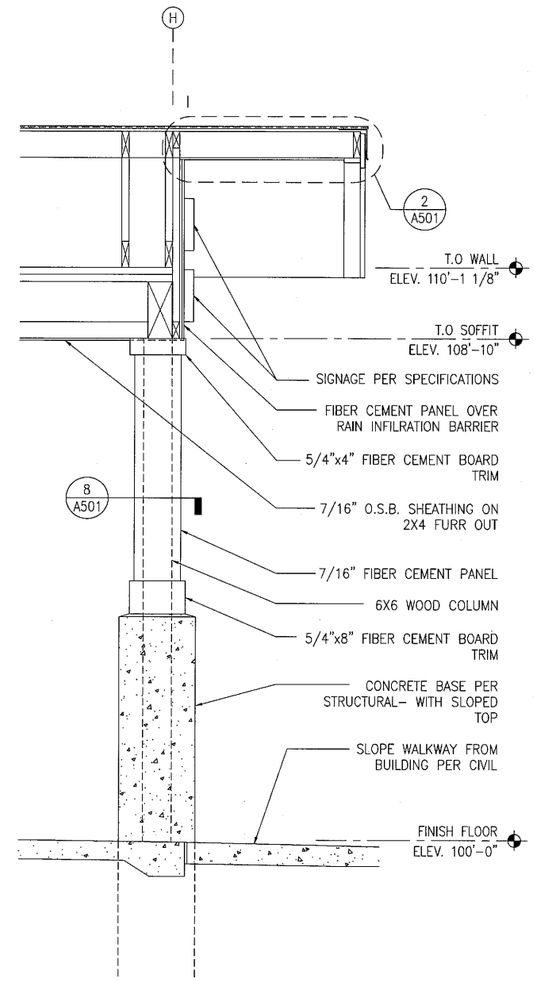

3 A401 **WALL SECTION**

GRAPHIC: 1" 4" 12" 24" 2" 6"

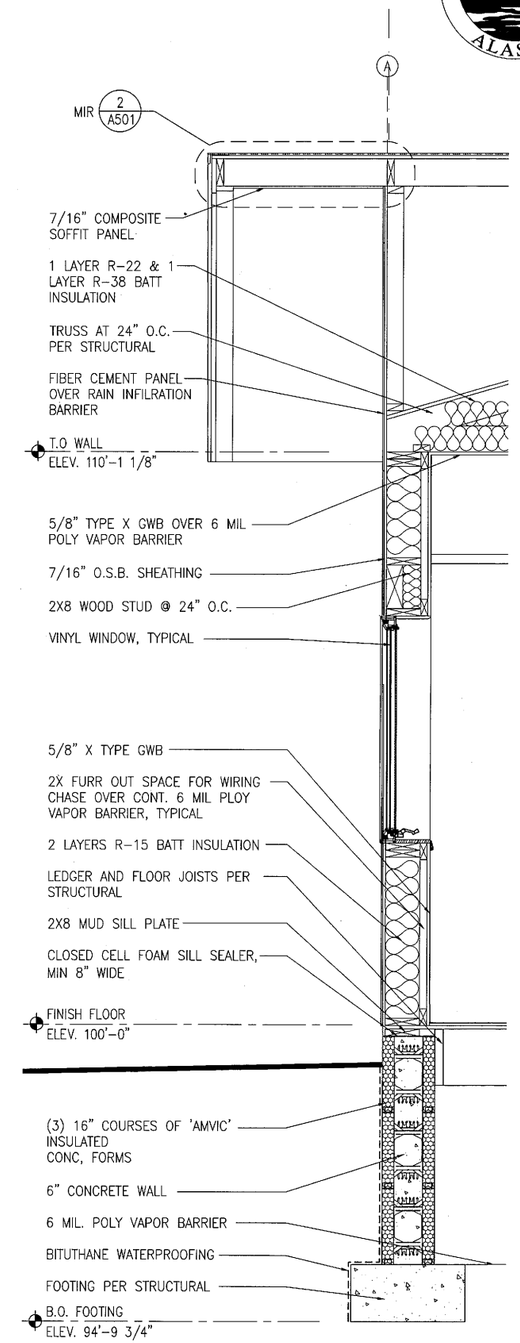

4 A401 **WALL SECTION**

GRAPHIC: 1" 4" 12" 24" 2" 6"

DENALI COMMISSION ALASKA

DATE	REVISIONS	INIT.

STATE OF ALASKA 49TH WILLIAM A. KLUGE A6301 REGISTERED PROFESSIONAL ARCHITECT 4-20 2009

ALASKA NATIVE TRIBAL HEALTH CONSORTIUM

DIVISION OF ENVIRONMENTAL HEALTH AND ENGINEERING
1901 SOUTH BRAGAW STREET, SUITE 200
ANCHORAGE, ALASKA, 99508–3440
(907) 729–3600

ALASKA NATIVE TRIBAL HEALTH CONSORTIUM

McGRATH SUB–REGIONAL HEALTH CENTER

WALL SECTIONS

DATE: 4/20/2009
SCALE: AS NOTED
DRAWN BY: CFP

FILE NAME:
PROJECT NO: 0198
PROJ ARCH. BK

SHEET A–401

8 OF 13A

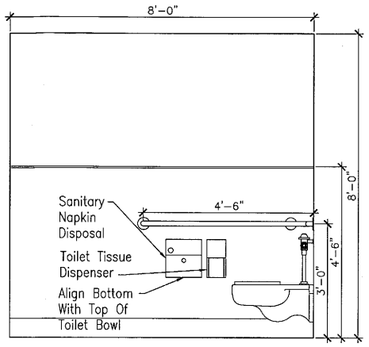

1 A402 TOILET-102

GRAPHIC: 0 6" 12" 24" 48"

ELEVATION 1/A402 ONLY:
TOILET-103 & TOILET-138: SAME AS TOILET-102
TOILET-116: SAME AS TOILET-102, BUT MIRRORED AND WITH W4 PER A-601

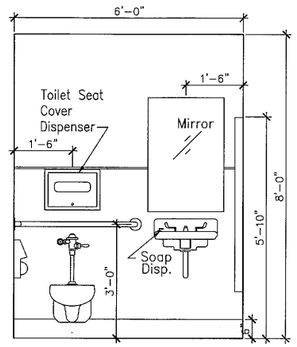

2 A402 TOILET-102

GRAPHIC: 0 6" 12" 24" 48"

ELEVATION 2/A402 ONLY:
TOILET-103: SAME AS TOILET-102
TOILET-116: SAME AS TOILET-102, BUT MIRRORED AND WITH W4 PER A-601

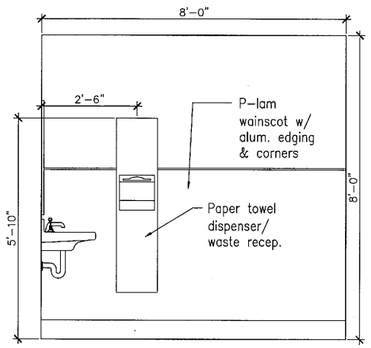

3 A402 TOILET-102

GRAPHIC: 0 6" 12" 24" 48"

ELEVATION 3/A402 ONLY:
TOILET-103: SAME AS TOILET-102
TOILET-116: SAME AS TOILET-102, BUT MIRRORED AND WITH W4 PER A-601

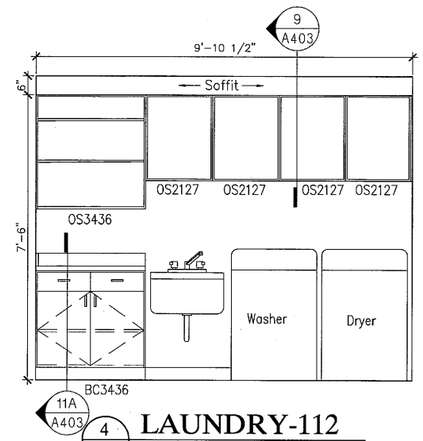

4 A402 LAUNDRY-112

GRAPHIC: 0 6" 12" 24" 48"

CABINETRY LEGEND

TYPE → BC 36 34
WIDTH OF CABINET
(BASE)HEIGHT A.F.F. TO TOP OF COUNTER OR (UPPER) HEIGHT OF UNIT

BC	BASE CABINET UNIT
SB	SINK BASE UNIT
DB	DRAWER BASE
UC	UPPER CABINET WALL UNIT
OS	OPEN SHELVING UNIT

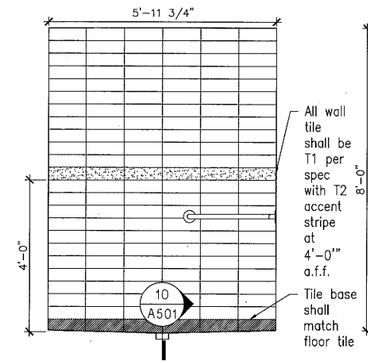

5 A402 SHOWER-115

GRAPHIC: 0 6" 12" 24" 48"

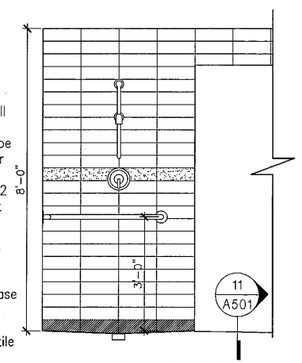

6 A402 SHOWER-115

GRAPHIC: 0 6" 12" 24" 48"

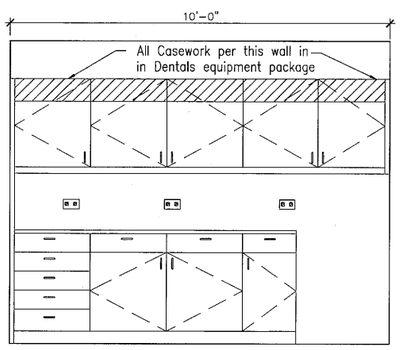

7 A402 CLEAN/DIRTY-118

GRAPHIC: 0 6" 12" 24" 48"

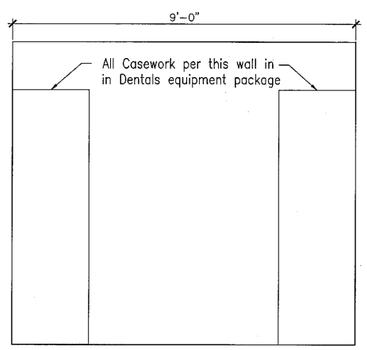

8 A402 CLEAN/DIRTY-118

GRAPHIC: 0 6" 12" 24" 48"

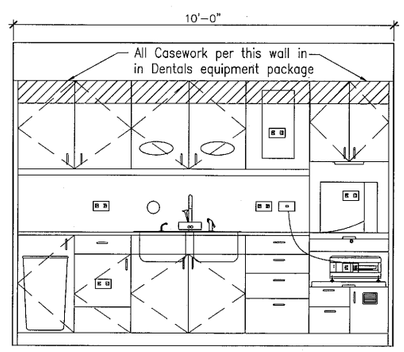

9 A402 CLEAN/DIRTY-118

GRAPHIC: 0 6" 12" 24" 48"

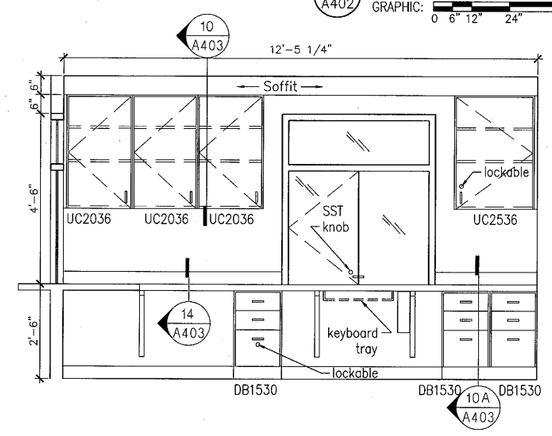

10 A402 RECEPTION-126

GRAPHIC: 0 6" 12" 24" 48"

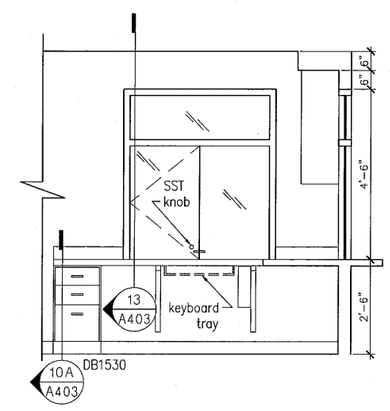

11 A402 RECEPTION-126

GRAPHIC: 0 6" 12" 24" 48"

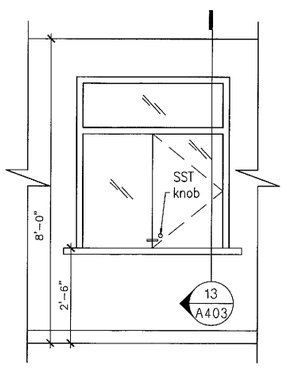

12 A402 WAITING-104

GRAPHIC: 0 6" 12" 24" 48"

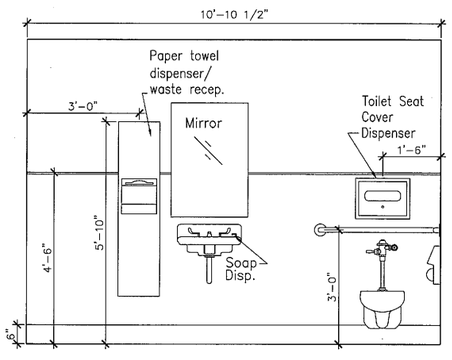

13 A402 H.C. BATH-131

GRAPHIC: 0 6" 12" 24" 48"

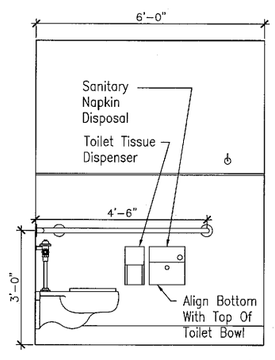

14 A402 H.C. BATH-131

GRAPHIC: 0 6" 12" 24" 48"

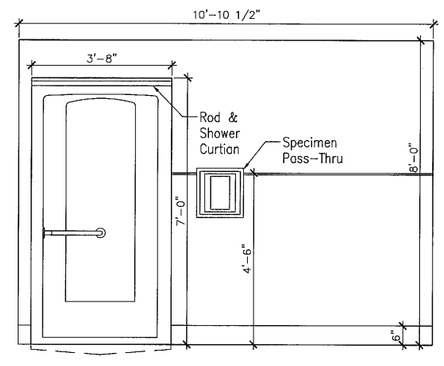

15 A402 H.C. BATH-131

GRAPHIC: 0 6" 12" 24" 48"

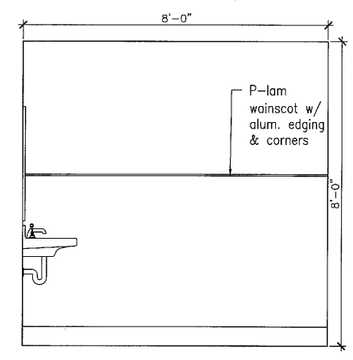

16 A402 TOILET-138

GRAPHIC: 0 6" 12" 24" 48"

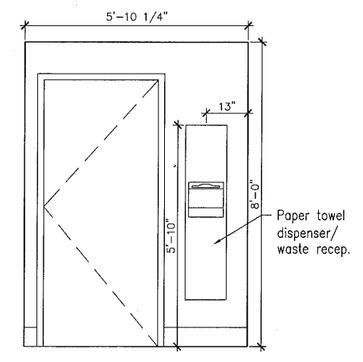

17 A402 TOILET-138

GRAPHIC: 0 6" 12" 24" 48"

DENALI COMMISSION ALASKA

INIT.	REVISIONS	DATE

STATE OF ALASKA — WILLIAM A. KLUGE — A6301 — REGISTERED PROFESSIONAL ARCHITECT
4-20 2009

ALASKA NATIVE TRIBAL HEALTH CONSORTIUM

DIVISION OF ENVIRONMENTAL HEALTH AND ENGINEERING
1901 SOUTH BRAGAW STREET, SUITE 200
ANCHORAGE, ALASKA, 99508-3440
(907) 729-3600

ALASKA NATIVE TRIBAL HEALTH CONSORTIUM

McGRATH SUB-REGIONAL HEALTH CENTER

INTERIOR ELEVATIONS

FILE NAME:
PROJECT NO: 0198
PROJ ARCH. BK
DATE: 4/20/2009
SCALE: AS NOTED
DRAWN BY: CFP CMP

SHEET A-402

9 OF 13A

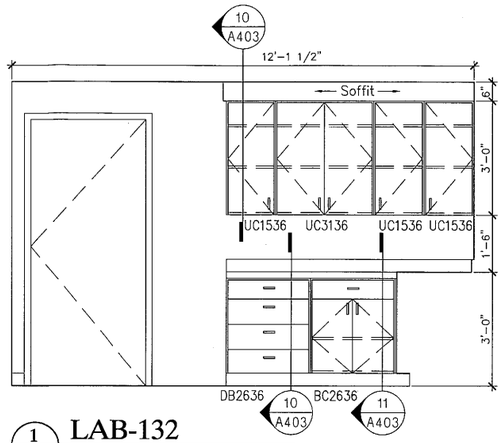

1 A403 **LAB-132**
GRAPHIC: 0 6" 12" 24" 48"

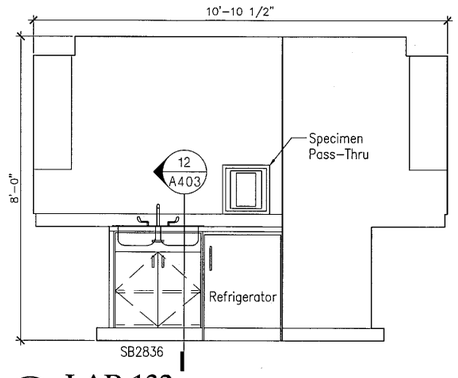

2 A403 **LAB-132**
GRAPHIC: 0 6" 12" 24" 48"

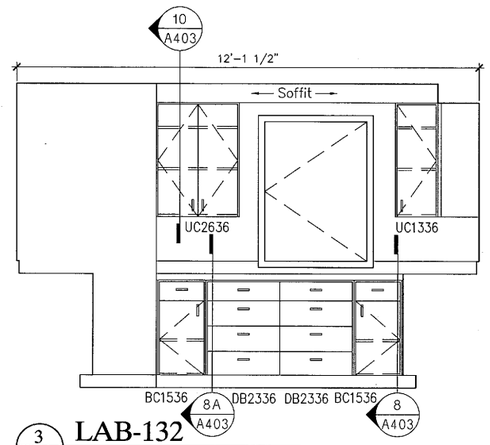

3 A403 **LAB-132**
GRAPHIC: 0 6" 12" 24" 48"

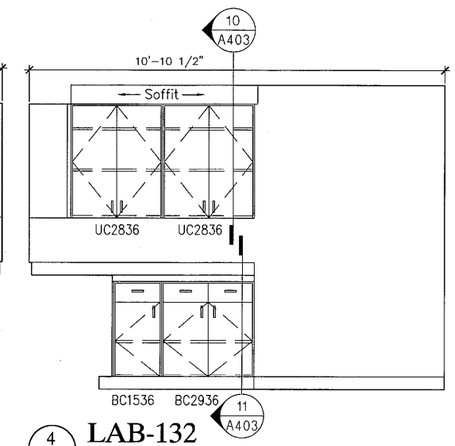

4 A403 **LAB-132**
GRAPHIC: 0 6" 12" 24" 48"

MILWORK NOTES

1. ADJUST CABINET WORK AND HARDWARE SO THAT DOORS AND DRAWERS OPERATE SMOOTHLY WITHOUT WARP OR BIND. LUBRICATE OPERATING HARDWARE AS RECOMMENDED BY MANUFACTURER
2. SEAL ALL WOOD SURFACES NOT RECEIVING PAINT OR PLASTIC LAMINATE TO AVOID MOISTURE PENETRATION.
3. ALL STEEL BRACKETS ARE TO BE SECURED TO STUDS OR BLOCKING AND NOT MOLLY BOLTED TO GYPSUM BOARD.
4. ALL MILLWORK DIMENSIONS SHALL BE FIELD VERIFIED PRIOR TO COMMENCING WORK. SOME DIMENSIONS WILL VARY DEPENDING ON EXISTING CONDITIONS AND ALIGNMENT OF NEW WORK.
5. GENERAL CONTRACTOR TO PROVIDE ALL BLOCKING TO SECURELY ATTACH MILLWORK TO DRYWALL CONSTRUCTION.
6. ALL SHELVING GREATER THAN 30" WIDTH SHALL BE MINIMUM 1" HI-DENSITY BOARD. THIS INCLUDES OPEN, BASE AND UPPER CABINETS.

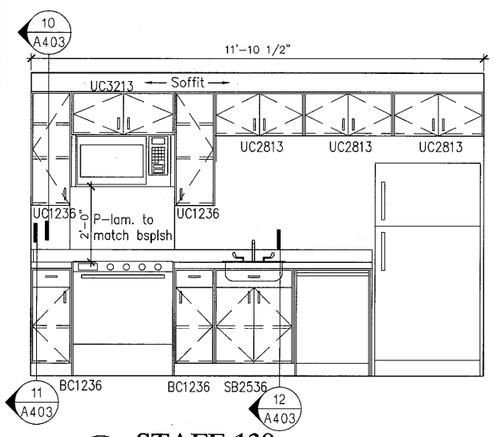

5 A403 **STAFF-139**
GRAPHIC: 0 6" 12" 24" 48"

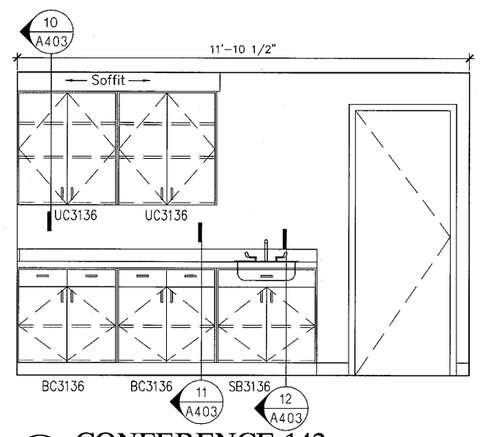

6 A403 **CONFERENCE-142**
GRAPHIC: 0 6" 12" 24" 48"

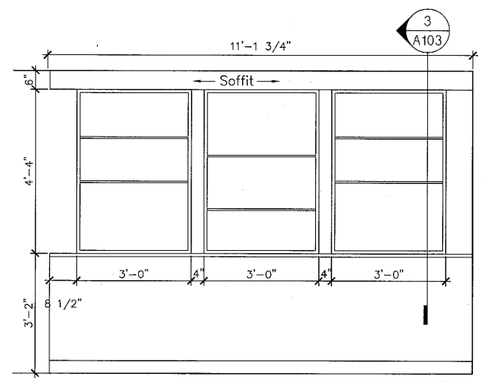

7 A403 **WAITING-104**
GRAPHIC: 0 6" 12" 24" 48"

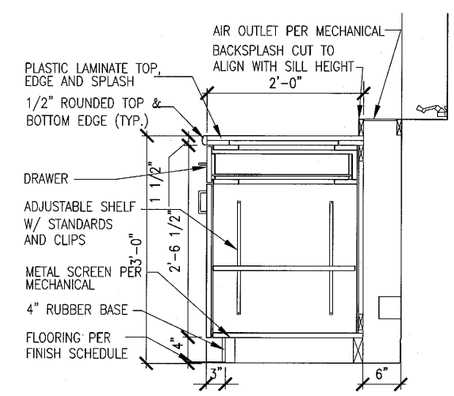

8 A403 **Base Cabinet**
GRAPHIC: 0 10" 20" 30"

8A A403 DETAIL 8A/A501 ONLY:
LAB-132: SAME BUT A FULL DRAWER BASE

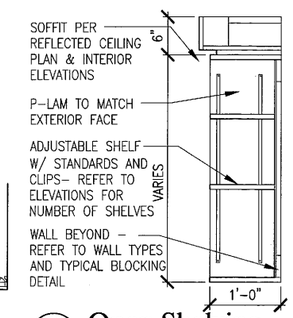

9 A403 **Open Shelving**
GRAPHIC: 0 10" 20" 30"

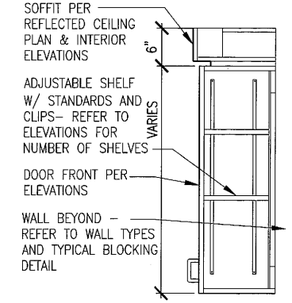

10 A403 **Upper Cabinet**
GRAPHIC: 0 10" 20" 30"

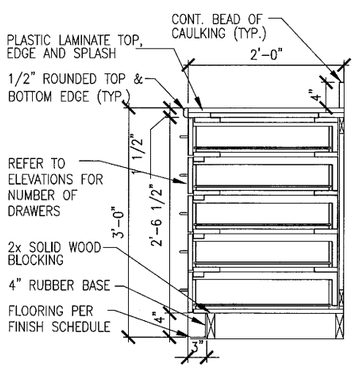

10 A403 **Drawer Base Cabinet**
GRAPHIC: 0 10" 20" 30"

10A A403 DETAIL 10A/A501 ONLY:
RECEPTION-126: SAME BUT 30" A.F.F. INSTEAD OF 36" A.F.F.

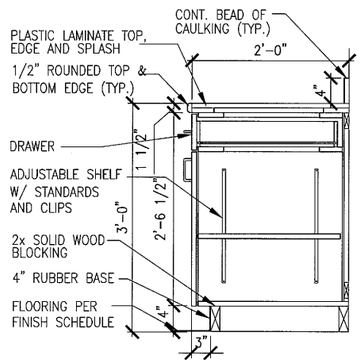

11 A403 **Base Cabinet**
GRAPHIC: 0 10" 20" 30"

11A A403 DETAIL 11A/A501 ONLY:
LAUNDRY-125: SAME BUT 30" DEPTH INSTEAD OF 24" DEPTH

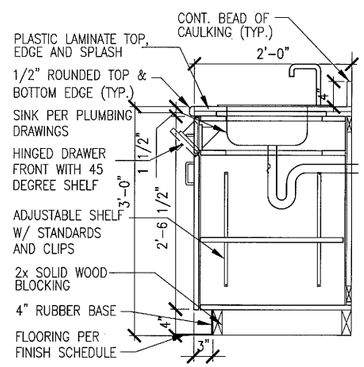

12 A403 **Base Sink Cabinet**
GRAPHIC: 0 10" 20" 30"

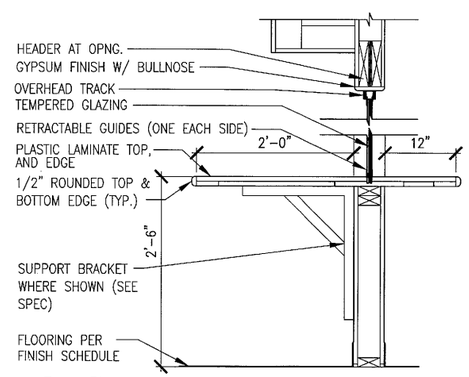

13 A403 **Countertop**
GRAPHIC: 0 10" 20" 30"

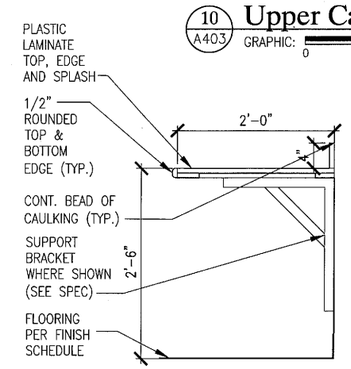

14 A403 **Countertop**
GRAPHIC: 0 10" 20" 30"

INIT.	REVISIONS	DATE

STATE OF ALASKA 49TH WILLIAM A. KLUGE A6301 REGISTERED PROFESSIONAL ARCHITECT
4.20 2009

ALASKA NATIVE TRIBAL HEALTH CONSORTIUM
DIVISION OF ENVIRONMENTAL HEALTH AND ENGINEERING
1901 SOUTH BRAGAW STREET, SUITE 200
ANCHORAGE, ALASKA, 99508-3440
(907) 729-3600

ALASKA NATIVE TRIBAL HEALTH CONSORTIUM

McGRATH SUB-REGIONAL HEALTH CENTER
INTERIOR ELEVATIONS

DATE: 4/20/2009
SCALE: AS NOTED
DRAWN BY: CFP CMP
FILE NAME:
PROJECT NO: 0198
PROJ ARCH. BK

DENALI COMMISSION ALASKA

SHEET A-403
10 OF 13A

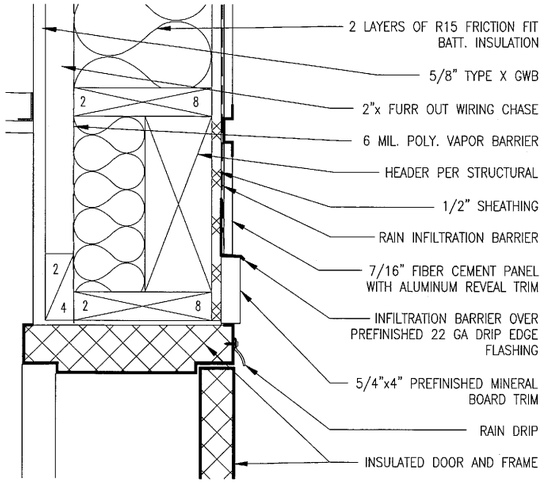

1 A501 Door Head Detail

GRAPHIC: 1/4" 1" 3" 6" 1/2" 2"

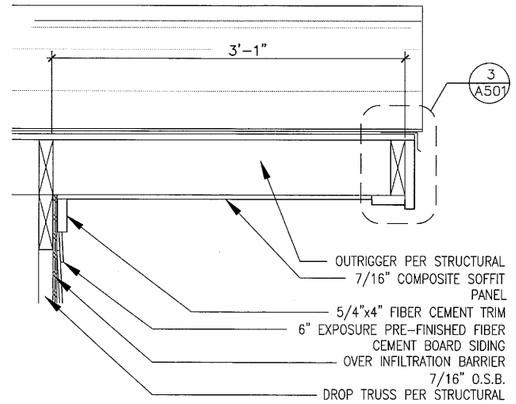

2 A501 Rake Soffit Detail

GRAPHIC: 1/4" 2" 6" 12" 1" 3"

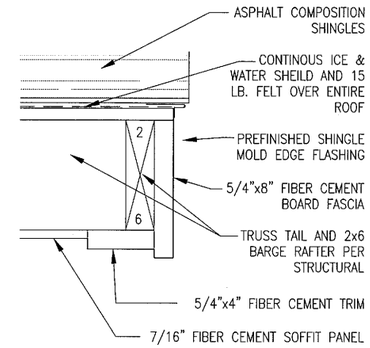

3 A501 Rake Fascia Detail

GRAPHIC: 1/4" 1" 3" 6" 1/2" 2"

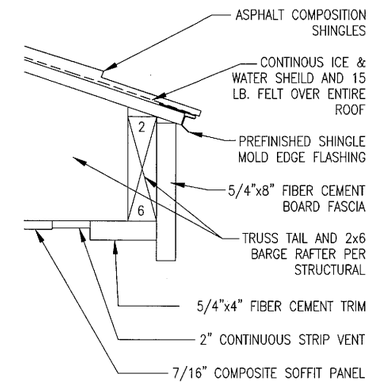

4 A501 Eave Fascia Detail

GRAPHIC: 1/4" 1" 3" 6" 1/2" 2"

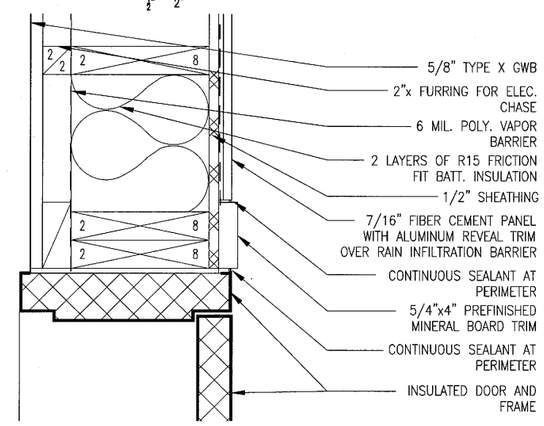

5 A501 Door Jamb Detail

GRAPHIC: 1/4" 1" 3" 6" 1/2" 2"

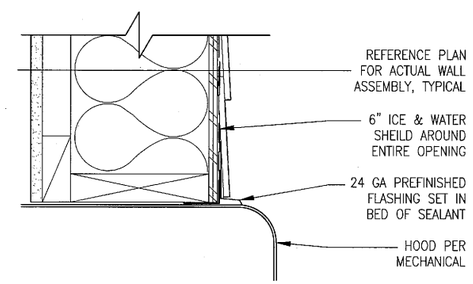

6 A501 Typical Hood Detail

GRAPHIC: 1/4" 1" 3" 6" 1/2" 2"

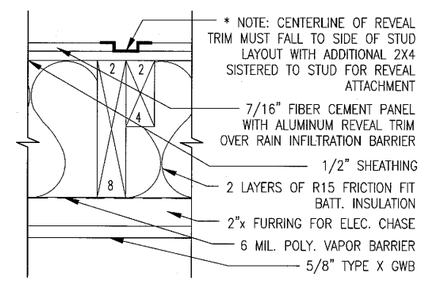

7 A501 Siding Detail

GRAPHIC: 1/4" 1" 3" 6" 1/2" 2"

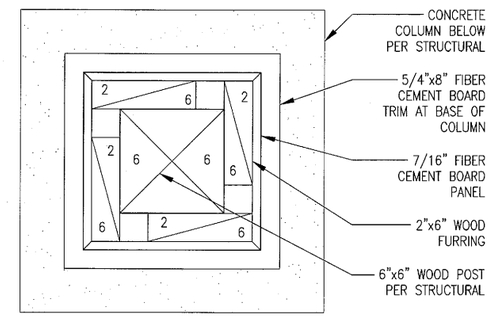

8 A501 Column Detail

GRAPHIC: 1/4" 1" 3" 6" 1/2" 2"

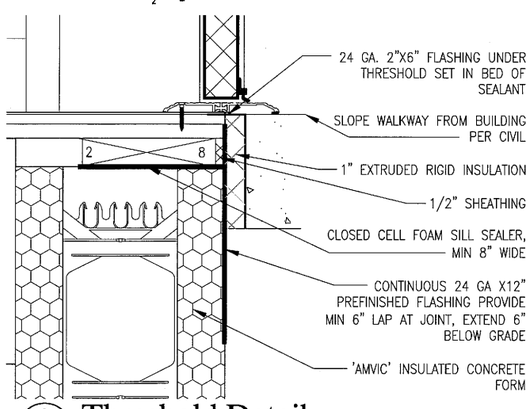

9 A501 Threshold Detail

GRAPHIC: 1/4" 1" 3" 6" 1/2" 2"

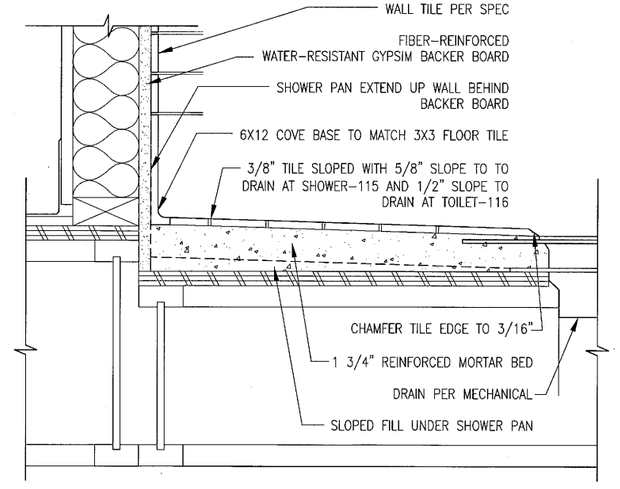

10 A501 Floor Tile Detail

GRAPHIC: 1/4" 1" 3" 6" 1/2" 2"

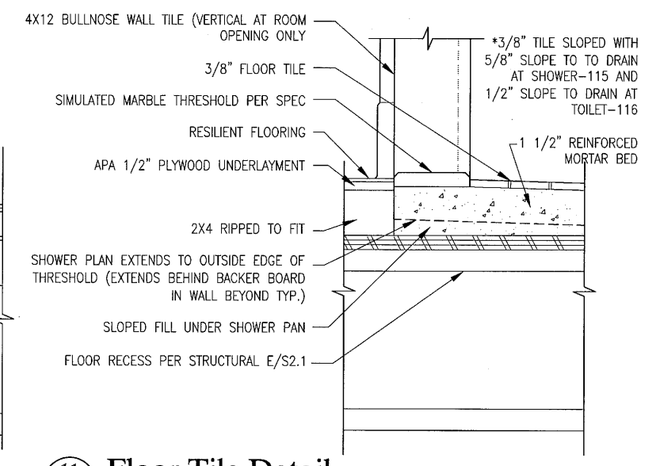

11 A501 Floor Tile Detail

GRAPHIC: 1/4" 1" 3" 6" 1/2" 2"

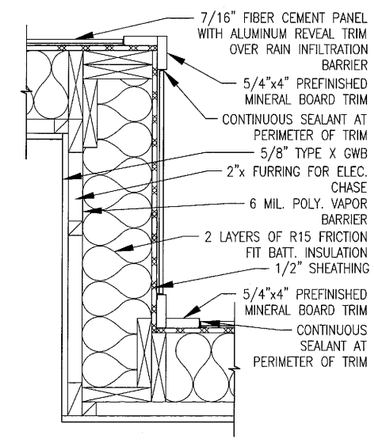

12 A501 Siding Detail

GRAPHIC: 1/4" 2" 6" 12" 1" 3"

DENALI COMMISSION ALASKA

DATE	REVISIONS	INIT.

STATE OF ALASKA 49TH WILLIAM A. KLUGE A6301 REGISTERED PROFESSIONAL ARCHITECT 4.20 2009

ALASKA NATIVE TRIBAL HEALTH CONSORTIUM

DIVISION OF ENVIRONMENTAL HEALTH AND ENGINEERING
1901 SOUTH BRAGAW STREET, SUITE 200
ANCHORAGE, ALASKA, 99508-3440
(907) 729-3600

ALASKA NATIVE TRIBAL HEALTH CONSORTIUM

McGRATH SUB-REGIONAL HEALTH CENTER
DETAILS

FILE NAME:
PROJECT NO: 0198
PROJ ARCH. BK
DATE: 4/20/2009
SCALE: AS NOTED
DRAWN BY: CFP CFP

SHEET A-501

11 OF 13A

1 ROOM FINISH SCHEDULE

MARK	ROOM NAME	FLOORING	BASE	WALLS				CEILING	CEILING HEIGHT	NOTE
				NORTH	EAST	SOUTH	WEST			
100	ENTRY	F1.1	B1	W1.2	W1.2	W1.2	W1.2	C1	8'-0"	
101	TELE/ELECTRICAL	F1.1	B1	W1.1	W1.1	W1.1	W1.1	C1	8'-0"	
102	H.C. TOILET	F1.1	B2	W1.2/W3	W1/2/W3	W1.2/W3	W1.2/W3	C1	8'-0"	
103	H.C. TOILET	F1.1	B2	W1.2/W3	W1/2/W3	W1.2/W3	W1.2/W3	C1	8'-0"	
104	WAITING	F1.1/F1.2	B1	W1.1/W2	W1.1/W2	W1.1/W2	W1.1/W2	C2	8'-0"	1
105	HEALTH EDUCATOR	F2	B1	W1.3	W1.3	W1.3	W1.3	C2	8'-0"	
106	BH CLINICIAN	F2	B1	W1.3	W1.3	W1.3	W1.3	C2	8'-0"	
107	BH CLINICIAN	F2	B1	W1.3	W1.3	W1.3	W1.3	C2	8'-0"	
108	BH CLINICIAN	F2	B1	W1.3	W1.3	W1.3	W1.3	C2	8'-0"	
109	BH CONFERENCE	F2	B1	W1.3	W1.3	W1.3	W1.3	C2	8'-0"	
110	CORRIDOR	F1.1	B1	W1.1/W2	W1.1/W2	W1.1/W2	W1.1/W2	C2	8'-0"	
111	MECHANICAL	F3	B1	W1.1	W1.1	W1.1	W1.1	C1	8'-0"	
112	LAUNDRY	F1.1	B1	W1.1	W1.1	W1.1	W1.1	C2	8'-0"	
113	CORRIDOR	F1.1	B1	W1.1/W2	W1.1/W2	W1.1/W2	W1.1/W2	C2	8'-0"	
114	TRUAMA EXAM	F1.1	B1/B3	W1.1	W5	W1.1	W5	C2	8'-0"	
115	SHOWER	F4	-	W4	W4	W4	W4	C1	8'-0"	2
116	H.C. TOILET	F4	-	W4	W4	W4	W4	C1	8'-0"	2
117	PHARMACY	F1.1	B1	W1.1	W1.1	W1.1	W1.1	C1	8'-0"	
118	CLEAN/DIRTY	F1.1	B1	W1.1	W1.1	W1.1	W1.1	C1	8'-0"	
119	EXAM	F1.1	B1	W1.1	W1.1	W1.1	W1.1	C2	8'-0"	
120	EXAM	F1.1	B1	W1.1	W1.1	W1.1	W1.1	C2	8'-0"	
121	EXAM	F1.1	B1	W1.1	W1.1	W1.1	W1.1	C2	8'-0"	
122	SPECIALTY PROCEDURE	F1.1	B1	W1.1	W1.1	W1.1	W1.1	C2	8'-0"	
123	FILING/STORAGE	F2	B1	W1.1	W1.1	W1.1	W1.1	C2	8'-0"	
124	BILLING	F2	B1	W1.1	W1.1	W1.1	W1.1	C2	8'-0"	
125	RECORDS	F2	B1	W1.1	W1.1	W1.1	W1.1	C2	8'-0"	
126	RECEPTION	F2	B1	W1.1	W1.1	W1.1	W1.1	C2	8'-0"	
127	WAITING	F1.1/F1.2	B1	W1.1/W2	W1.1/W2	W1.1/W2	W1.1/W2	C2	8'-0"	1
128	ENTRY	F1.1	B1	W1.2	W1.2	W1.2	W1.2	C1	8'-0"	
129	MORGUE/EMS STORAGE	F1.1	B1	W1.1	W1.1	W1.1	W1.1	C1	8'-0"	
130	PATIENT HOLDING/SLEEPING	F2	B1	W1.1	W1.1	W1.1	W1.1	C2	8'-0"	
131	H.C. TOILET	F1.1	B2	W1.2/W3	W1/2/W3	W1.2/W3	W1.2/W3	C1	8'-0"	
132	LAB	F1.1	B1	W1.1	W1.1	W1.1	W1.1	C2	8'-0"	
133	DENTAL	F1.1	B1	W1.1	W1.1	W1.1	W1.1	C2	8'-0"	
134	ADMIN	F2	B1	W1.3	W1.3	W1.3	W1.3	C2	8'-0"	
135	OFFICE	F2	B1	W1.3	W1.3	W1.3	W1.3	C2	8'-0"	
136	OFFICE	F2	B1	W1.3	W1.3	W1.3	W1.3	C2	8'-0"	
137	CORRIDOR	F1.1	B1	W1.1/W2	W1.1/W2	W1.1/W2	W1.1/W2	C2	8'-0"	
138	H.C. TOILET	F1.1	B2	W1.2/W3	W1/2/W3	W1.2/W3	W1.2/W3	C1	8'-0"	
139	STAFF	F1.1	B1	W1.1	W1.1	W1.1	W1.1	C2	8'-0"	
140	CORRIDOR	F1.1	B1	W1.1/W2	W1.1/W2	W1.1/W2	W1.1/W2	C2	8'-0"	
141	JANITOR	F1.1	B1	W1.1/W2	W1.1/W2	W1.1/W2	W1.1/W2	C1	10'-1/2"	
142	CONFERENCE	F2	B1	W1.1	W1.1	W1.1	W1.1	C2	8'-0"	
143	STORAGE	F2	B1	W1.3	W1.3	W1.3	W1.3	C1	8'-0"	

FLOORING

F1.1 RESILIENT FLOORING
F1.2 RESILIENT FLOORING
F2 CARPET
F3 SEALED CONCRETE
F4 3X3 TILE

BASE

B1 4" RESILIENT BASE
B2 6" BEVELED P-LAM
B3 6" STAINLESS STEEL BASE

WALLS

W1.1 PAINT/ IPS 10
W1.2 PAINT/ IPS 20
W1.3 PAINT/ IPS 30
W2 RIGID VINYL SHEET TO HEIGHT OF WALL GUARD W/ PAINT ABOVE
W3 P-LAM WAINSCOT 48" A.F.F. WITH METAL CAP & CORNER TRIM
W4 WALL TILE, FLOOR TO CEILING
W5 W1.1 WITH B3

CEILING

C1 GWB/ IPS 10
C2 2X4 SUSPENDED ACOUSTIC TILE

NOTES

1. SEE A-102 FOR FLOOR PATTERN
2. SEE A-402 FOR WALL TILE PATTERN

GENERAL FINISH NOTES

1. THE CONTRACTOR SHALL PROPERLY PREPARE THE SURFACES PER FINISH MANUFACTURER'S SPECIFICATIONS PRIOR TO APPLICATION OF FINISH. ALL FINISHES AND ADJOINING SURFACES SHALL REMAIN FREE OF GLUE, PLASTER AND PAINT EXCESS.

2. THE GENERAL CONTRACTOR SHALL BE RESPONSIBLE FOR ALL COORDINATION BETWEEN TRADES TO INSURE PROPER INSTALLATION OF FINISH FOR COLORS AND QUALITIES.

3. PREPARE FLOOR AREAS AS REQUIRED TO RECEIVE FLOOR FINISHES, INCLUDING FLASH PATCHING REQUIRED TO LEVEL TO 1/4" IN 20' AND SMOOTH FLOOR.

4. ANY CHANGE IN FLOOR FINISH SHALL OCCUR AT CENTERLINE OF DOOR OR CASED OPENING UNLESS OTHERWISE NOTED. E INTERIOR FINISHES, IN MEANS OF EGRESS, SHALL BE CLASS "A" FIRE RATED.

5. PROVIDE ACOUSTICAL SEALANT AT ALL EDGES AND PENETRATIONS THROUGH ACOUSTICAL WALLS.

6. ALL WALLS ARE TO EXTEND TO STRUCTURE ABOVE AS APPROPRIATE. REFERENCE WALL SECTIONS SHEETS A4.3 AND A4.4. 3. ALL DIMENSIONS ARE TO FACE OF FRAMING TYPICAL UNLESS OTHERWISE NOTED.

7. REFER TO SHEET F1.1 FOR MODULAR CABINETRY/FURNISHINGS PROVIDED AND INSTALLED BY OWNER. CONTRACTOR SHALL BE RESPONSIBLE FOR COORDINATING ALL ROOM FINISHES, PLUMBING AND ELECTRICAL ITEMS IMPACTING SAID ROOM FURNISHINGS.

8. ALL FLOOR BASE SHALL BE SEALED TO FLOORING WITH A FINE BEAD OF SEALANT AT THE BOTTOM EDGE OF THE BASE.

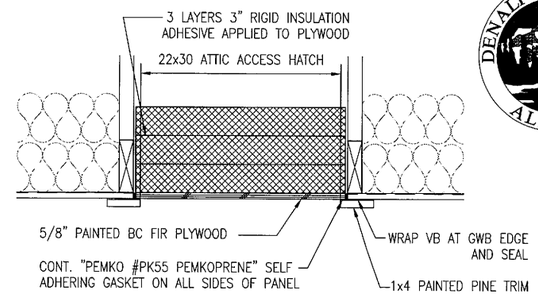

2 A601 ATTIC ACCESS HATCH

GRAPHIC: 0 2" 4" 8" 16"

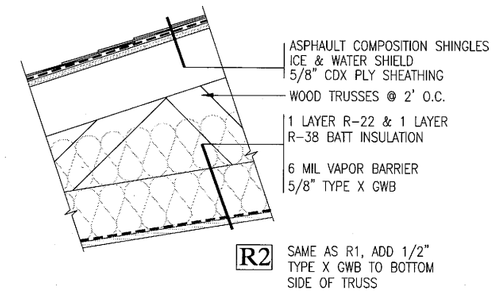

3 A601 R1 TYP. ROOF ASSEMBLY

GRAPHIC: 0 2" 4" 8" 16"

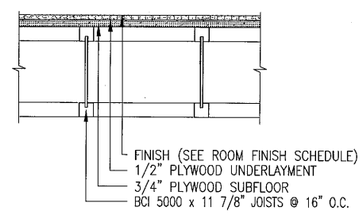

4 A601 F1 TYP. FLOOR ASSEMBLY

GRAPHIC: 0 2" 4" 8" 16"

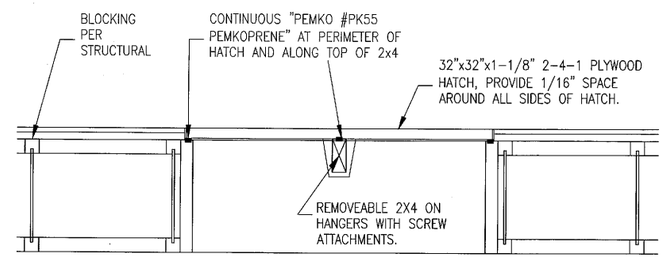

5 A601 CRAWL SPACE ACCESS HATCH

GRAPHIC: NOT TO SCALE

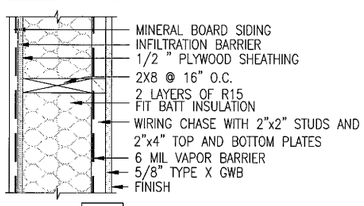

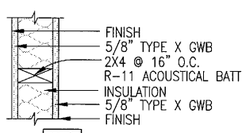

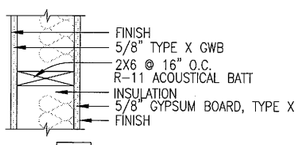

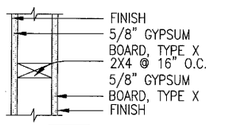

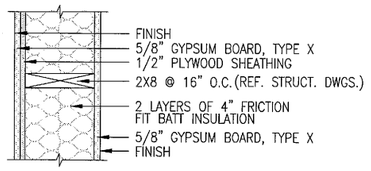

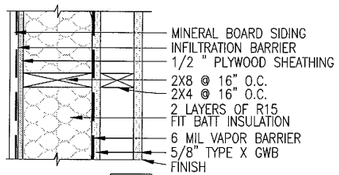

6 A601 WALL ASSEMBLIES

GRAPHIC: 0 2" 4" 8" 16"

NOTE:
1. ALL WALLS SHALL BE W2 TYPICAL UNLESS OTHERWISE NOTED PER A-102.

DENALI COMMISSION ALASKA

INIT.	REVISIONS	DATE

STATE OF ALASKA 40TH WILLIAM A. KLUGE A6301 REGISTERED PROFESSIONAL ARCHITECT 4.20.2009

ALASKA NATIVE TRIBAL HEALTH CONSORTIUM

DIVISION OF ENVIRONMENTAL HEALTH AND ENGINEERING
1901 SOUTH BRAGAW STREET, SUITE 200
ANCHORAGE, ALASKA, 99508-3440
(907) 729-3600

McGRATH SUB-REGIONAL HEALTH CENTER
FINISH SCHEDULE AND ASSEMBLIES

FILE NAME:
PROJECT NO: 0198
PROJ ARCH: BK
DATE: 4/20/2009
SCALE: AS NOTED
DRAWN BY: CFP

SHEET A-601

1 DOOR/FRAME SCHEDULE

DOOR NUMBER	ROOM NAME & NUMBER	DOOR WIDTH	DOOR HEIGHT	DOOR TYPE	DOOR THICK.	DOOR MAT.	DOOR FINISH	FRAME MAT.	FRAME FINISH	HARDWARE GROUP	RATING	THRESHOLD	HEAD DETAIL	JAMB DETAIL	SILL DETAIL	REMARKS
100A	ENTRY–100	3'–0"	7'–0"	A	1 3/4"	INS ST	EPS 30	INS ST	EPS 30	4	NR	YES	1/A501	5/A501	9/A501	
100B	ENTRY–100	3'–0"	7'–0"	A	1 3/4"	INS ST	IPS 40	INS ST	IPS 40	2	20 MIN	YES	1/A501	5/A501	9/A501	
101	TELE/ELECTRICAL–101	3'–0"	7'–0"	B	1 3/8"	SCW	FACTORY	H.M.	IPS 40	1	NR	----	1/A602	3/A602	---	
102	H.C. TOILET–102	3'–0"	7'–0"	B	1 3/8"	SCW	FACTORY	H.M.	IPS 40	3	20 MIN	----	1/A602	3/A602	---	
103	H.C. TOILET–103	3'–0"	7'–0"	B	1 3/8"	SCW	FACTORY	H.M.	IPS 40	3	20 MIN	----	1/A602	3/A602	---	
105	HEALTH EDUC.–105	3'–0"	7'–0"	B	1 3/8"	SCW	FACTORY	H.M.	IPS 40	1	20 MIN	----	1/A602	3/A602	---	
106	BH CLINICIAN–106	3'–0"	7'–0"	B	1 3/8"	SCW	FACTORY	H.M.	IPS 40	1	20 MIN	----	1/A602	3/A602	---	
107	BH CLINICIAN–107	3'–0"	7'–0"	B	1 3/8"	SCW	FACTORY	H.M.	IPS 40	1	20 MIN	----	1/A602	3/A602	---	
108	BH CLINICIAN–108	3'–0"	7'–0"	B	1 3/8"	SCW	FACTORY	H.M.	IPS 40	1	20 MIN	----	1/A602	3/A602	---	
109	BH CLINICIAN–109	3'–0"	7'–0"	B	1 3/8"	SCW	FACTORY	H.M.	IPS 40	1	20 MIN	----	1/A602	3/A602	---	
111	MECHANICAL–111	3'–0"	7'–0"	B	1 3/4"	INS ST	EPS 30	INS ST	EPS 30	7	NR	YES	1/A501	5/A501	9/A501	
112	LAUNDRY–112	3'–0"	7'–0"	B	1 3/8"	SCW	FACTORY	H.M.	IPS 40	1	20 MIN	----	1/A602	3/A602	---	
113	HALL–113	3'–0"	7'–0"	E	1 3/8"	SCW	FACTORY	H.M.	IPS 40	1	NR	----	1/A602	3/A602	---	
114	TRUAMA EXAM–114	4'–0"	7'–0"	B	1 3/8"	SCW	FACTORY	H.M.	IPS 40	6	20 MIN	----	1/A602	3/A602	---	
116	H.C. TOILET–116	3'–0"	7'–0"	B	1 3/8"	SCW	FACTORY	H.M.	IPS 40	3	NR	----	1/A602	3/A602	---	
117	PHARMACY–117	3'–0"	7'–0"	E	1 3/8"	SCW	FACTORY	H.M.	IPS 40	1	20 MIN	----	1/A602	3/A602	---	
119	EXAM–119	3'–0"	7'–0"	B	1 3/8"	SCW	FACTORY	H.M.	IPS 40	1	20 MIN	----	1/A602	3/A602	---	
120	EXAM–120	3'–0"	7'–0"	B	1 3/8"	SCW	FACTORY	H.M.	IPS 40	1	20 MIN	----	1/A602	3/A602	---	
121	EXAM–121	3'–0"	7'–0"	B	1 3/8"	SCW	FACTORY	H.M.	IPS 40	1	20 MIN	----	1/A602	3/A602	---	
122A	SPEC. PROCD.–122	3'–0"	7'–0"	B	1 3/8"	SCW	FACTORY	H.M.	IPS 40	1	20 MIN	----	1/A602	3/A602	---	
122B	SPEC. PROCD.–122	3'–0"	7'–0"	B	1 3/8"	SCW	FACTORY	H.M.	IPS 40	1	20 MIN	----	1/A602	3/A602	---	
123	FILING/STR.–123	3'–0"	7'–0"	B	1 3/8"	SCW	FACTORY	H.M.	IPS 40	1	20 MIN	----	1/A602	3/A602	---	
124	BILLING–124	3'–0"	7'–0"	E	1 3/8"	SCW	FACTORY	H.M.	IPS 40	1	20 MIN	----	1/A602	3/A602	---	
125	RECORDS–125	3'–0"	7'–0"	B	1 3/8"	SCW	FACTORY	H.M.	IPS 40	1	20 MIN	----	1/A602	3/A602	---	
126	RECEPTION–126	3'–0"	7'–0"	E	1 3/8"	SCW	FACTORY	H.M.	IPS 40	1	NR	----	1/A602	3/A602	---	
128A	ENTRY–128	4'–0"	7'–0"	A	1 3/4"	INS ST	EPS 30	INS ST	EPS 30	4	NR	YES	1/A501	5/A501	9/A501	
128B	ENTRY–128	4'–0"	7'–0"	A	1 3/4"	INS ST	IPS 40	INS ST	IPS 40	2	NR	YES	1/A501	5/A501	9/A501	
129	MORGUE/EMS–129	4'–0"	7'–0"	B	1 3/4"	SCW	IPS 40	H.M.	IPS 40	2	NR	----	1/A602	3/A602	---	
130	PATIENT HOLD.–130	3'–0"	7'–0"	B	1 3/8"	SCW	FACTORY	H.M.	IPS 40	1	20 MIN	----	1/A602	3/A602	---	
131	H.C. BATH–131	3'–0"	7'–0"	B	1 3/8"	SCW	FACTORY	H.M.	IPS 40	3	20 MIN	----	1/A602	3/A602	---	
132	LAB–132	3'–0"	7'–0"	E	1 3/8"	SCW	FACTORY	H.M.	IPS 40	1	20 MIN	----	1/A602	3/A602	---	
133A	DENTAL–133	3'–0"	7'–0"	B	1 3/8"	SCW	FACTORY	H.M.	IPS 40	1	20 MIN	----	1/A602	3/A602	---	
133B	DENTAL–133	3'–0"	7'–0"	B	1 3/8"	SCW	FACTORY	H.M.	IPS 40	1	20 MIN	----	1/A602	3/A602	---	
134	ADMIN–134	3'–0"	7'–0"	E	1 3/8"	SCW	FACTORY	H.M.	IPS 40	1	20 MIN	----	1/A602	3/A602	---	
135	OFFICE–135	3'–0"	7'–0"	E	1 3/8"	SCW	FACTORY	H.M.	IPS 40	1	20 MIN	----	1/A602	3/A602	---	
136	OFFICE–136	3'–0"	7'–0"	E	1 3/8"	SCW	FACTORY	H.M.	IPS 40	1	NR	----	1/A602	3/A602	---	
137	HALL–137	3'–0"	7'–0"	E	1 3/8"	SCW	FACTORY	H.M.	IPS 40	1	NR	----	1/A602	3/A602	---	
138	H.C. TOILET	3'–0"	7'–0"	B	1 3/8"	SCW	FACTORY	H.M.	IPS 40	3	20 MIN	----	1/A602	3/A602	---	
139	STAFF–139	3'–0"	7'–0"	E	1 3/8"	SCW	FACTORY	H.M.	IPS 40	1	20 MIN	----	1/A602	3/A602	---	
141	JANITOR/STOR.–141	3'–0"	7'–0"	B	1 3/8"	SCW	FACTORY	H.M.	IPS 40	1	20 MIN	----	1/A602	3/A602	---	
142	CONFERENCE–142	3'–0"	7'–0"	C	1 3/8"	SCW	FACTORY	H.M.	IPS 40	1	NR	----	1/A602	3/A602	---	
143	STORAGE–143	3'–0"	7'–0"	B	1 3/8"	SCW	FACTORY	H.M.	IPS 40	5	20 MIN	----	1/A602	3/A602	---	

ABBREVIATIONS
INS ST = INSULATED STEEL
SCW = SOLID CORE WOOD
H.M. = HOLLOW METAL

RELATED SPECIFICATION SECTIONS
08100: STEEL DOORS & FRAMES
08110: INTERIOR STEEL FRAMES
08211: WOOD DOORS
08700: DOOR HARDWARE

NOTES
1. DOOR NUMBERS 104, 110, 115, 118, 127 & 140 ARE NOT USED.
2. ALL RATED DOORS REQUIRE RATED DOOR/FRAME ASSEMBLY.
3. DOORS 113 & 137 SHALL BE LOCKABLE FROM 127 AND ALWAYS UNLOCKED FROM HALL–110 & HALL–137.

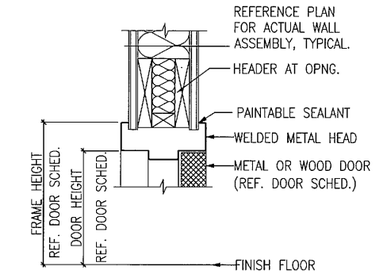

1 A602 INTERIOR DOOR HEAD

GRAPHIC: 0 2" 4" 8" 16"

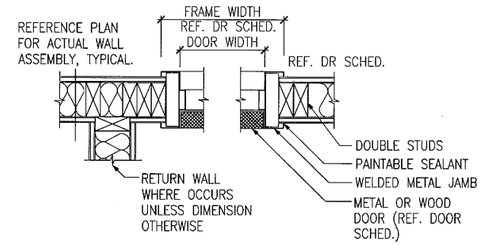

3 A602 INTERIOR DOOR JAMB

GRAPHIC: 0 2" 4" 8" 16"

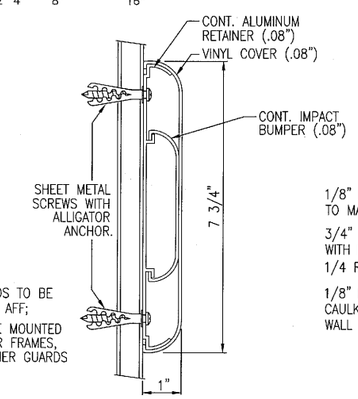

NOTES:
1. TOP OF WALL GUARDS TO BE MOUNTED AT 2'–10" AFF;
2. WALL GUARDS TO BE MOUNTED 2" AWAY FROM DOOR FRAMES, CORNERS, AND CORNER GUARDS

4 A602 WALL GUARD

GRAPHIC: 0 1/2" 1" 2" 4" SCALE: 6"=1'–0"

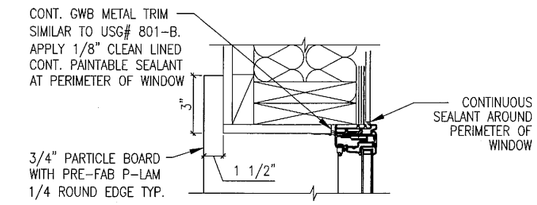

2 A602 CASEMENT WINDOW JAMB

GRAPHIC: 0 2" 4" 6" 12"

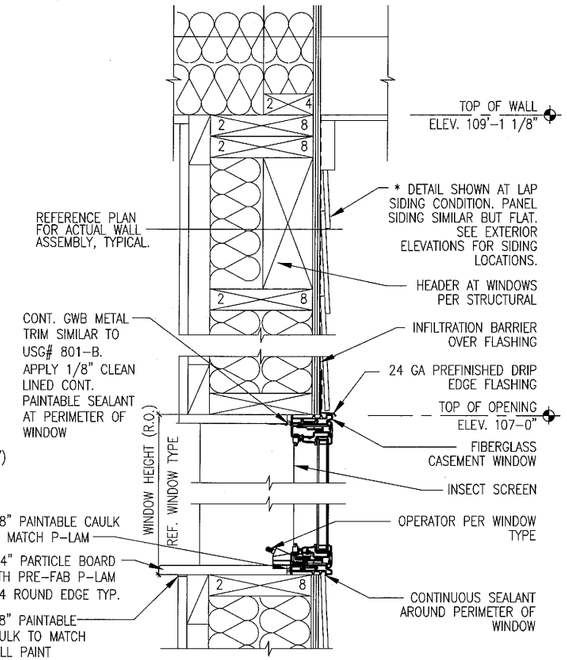

NOTE:
1. WINDOW TYPE 1 IS SHOWN (TYPE 2–3 ARE SIMILAR)
2. JAMB DETAIL IS SIMILAR TO HEAD

5 A602 CASEMENT WINDOW HEAD/SILL

GRAPHIC: 0 2" 4" 6" 12"

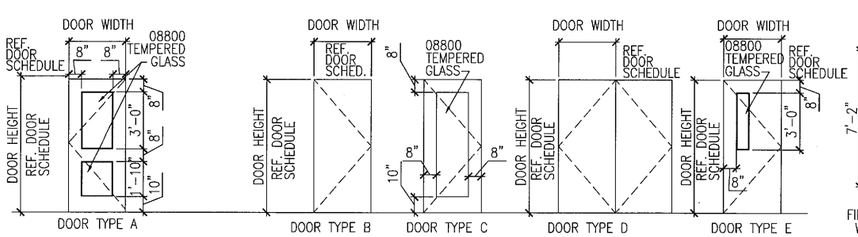

6 A602 DOOR TYPES

GRAPHIC: 0 1' 2' 4' 8'

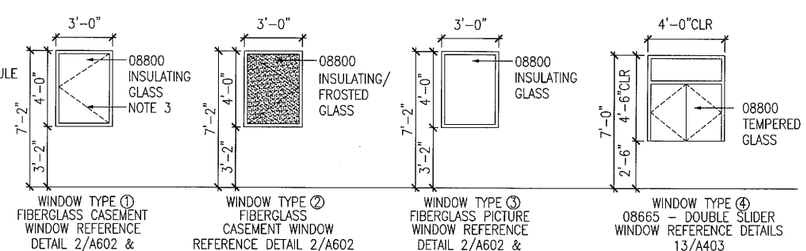

WINDOW TYPE ① FIBERGLASS CASEMENT WINDOW REFERENCE DETAIL 2/A602 & 5/A602

WINDOW TYPE ② FIBERGLASS CASEMENT WINDOW REFERENCE DETAIL 2/A602 & 5/602

WINDOW TYPE ③ FIBERGLASS PICTURE WINDOW REFERENCE DETAIL 2/A602 & 5/602

WINDOW TYPE ④ 08665 – DOUBLE SLIDER WINDOW REFERENCE DETAILS 13/A403

7 A602 WINDOW TYPES

GRAPHIC: 0 1' 2' 4' 8'

NOTE:
1. PROVIDE INSECT SCREEN AT OPERABLE EXTERIOR WINDOWS TYP.
2. PROVIDE PERFORATED BLINDS TYPICAL.
3. PROVIDE NON–PERFORATED BLINDS IN THE FOLLOWING ROOMS: 109, 130, 138, & 142.
4. REF. ELEVS. FOR DIRECTION OF OPERABLE PANE.
5. AT WINDOW TYPE 4: PROVIDE LOCK PER WINDOW MANUFACTURER

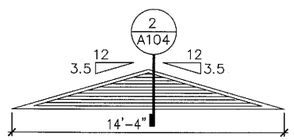

8 A602 LOUVER TYPE

NOTE:
1. REFER TO SPECIFICATIONS FOR LOUVER TYPE

INIT.	REVISIONS	DATE

STATE OF ALASKA 49TH WILLIAM A. KLUGE AA301 REGISTERED PROFESSIONAL ARCHITECT 4.20 2009

ALASKA NATIVE TRIBAL HEALTH CONSORTIUM

DIVISION OF ENVIRONMENTAL HEALTH AND ENGINEERING
1901 SOUTH BRAGAW STREET, SUITE 200
ANCHORAGE, ALASKA, 99508–3440
(907) 729–3600

McGRATH SUB–REGIONAL HEALTH CENTER
DOOR SCHEDULE AND TYPES

DATE: 4/20/2009
SCALE: AS NOTED
DRAWN BY: CFP
FILE NAME:
PROJECT NO: 0198
PROJ ARCH. BK

SHEET A–602

13 OF 13A

DENALI COMMISSION ALASKA

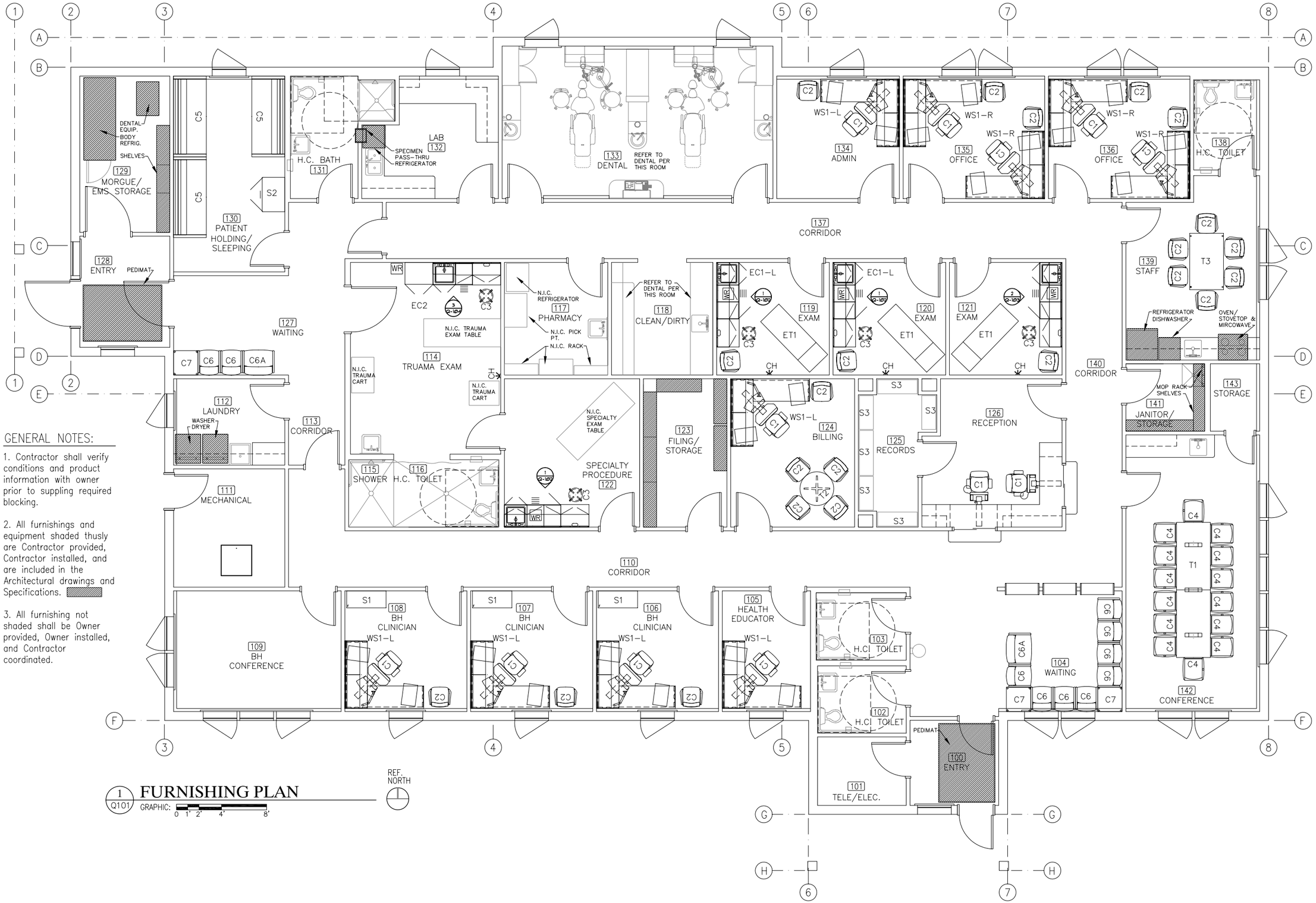

GENERAL NOTES:

1. Contractor shall verify conditions and product information with owner prior to suppling required blocking.

2. All furnishings and equipment shaded thusly are Contractor provided, Contractor installed, and are included in the Architectural drawings and Specifications.

3. All furnishing not shaded shall be Owner provided, Owner installed, and Contractor coordinated.

1 Q101 **FURNISHING PLAN**

GRAPHIC: 0 1' 2' 4' 8'

INIT.	REVISIONS	DATE

DENALI COMMISSION ALASKA

ALASKA NATIVE TRIBAL HEALTH CONSORTIUM

DIVISION OF ENVIRONMENTAL HEALTH AND ENGINEERING
1901 SOUTH BRAGAW STREET, SUITE 200
ANCHORAGE, ALASKA, 99508-3440
(907) 729-3600

McGRATH SUB-REGIONAL HEALTH CENTER
FURNISHING PLAN

DATE: 4/20/2009
SCALE: AS NOTED
DRAWN BY:

FILE NAME:
PROJECT NO: 0198
PROJ ARCH. BK

SHEET Q-101

1 OF 6Q

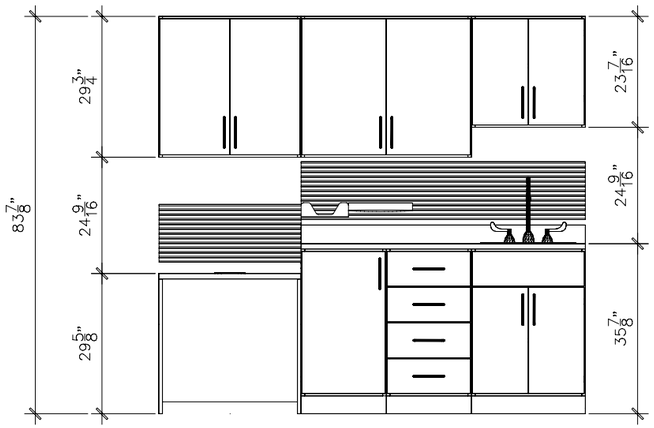

1 Q-101 ELEVATION - EC1-L

SCALE: 3/4"=1'-0"

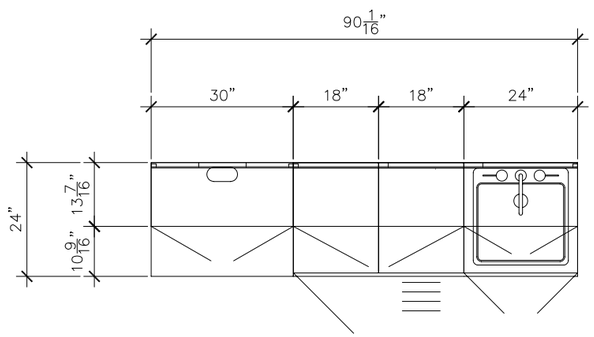

1 Q-101 PLAN - EC1-L

SCALE: 3/4"=1'-0"

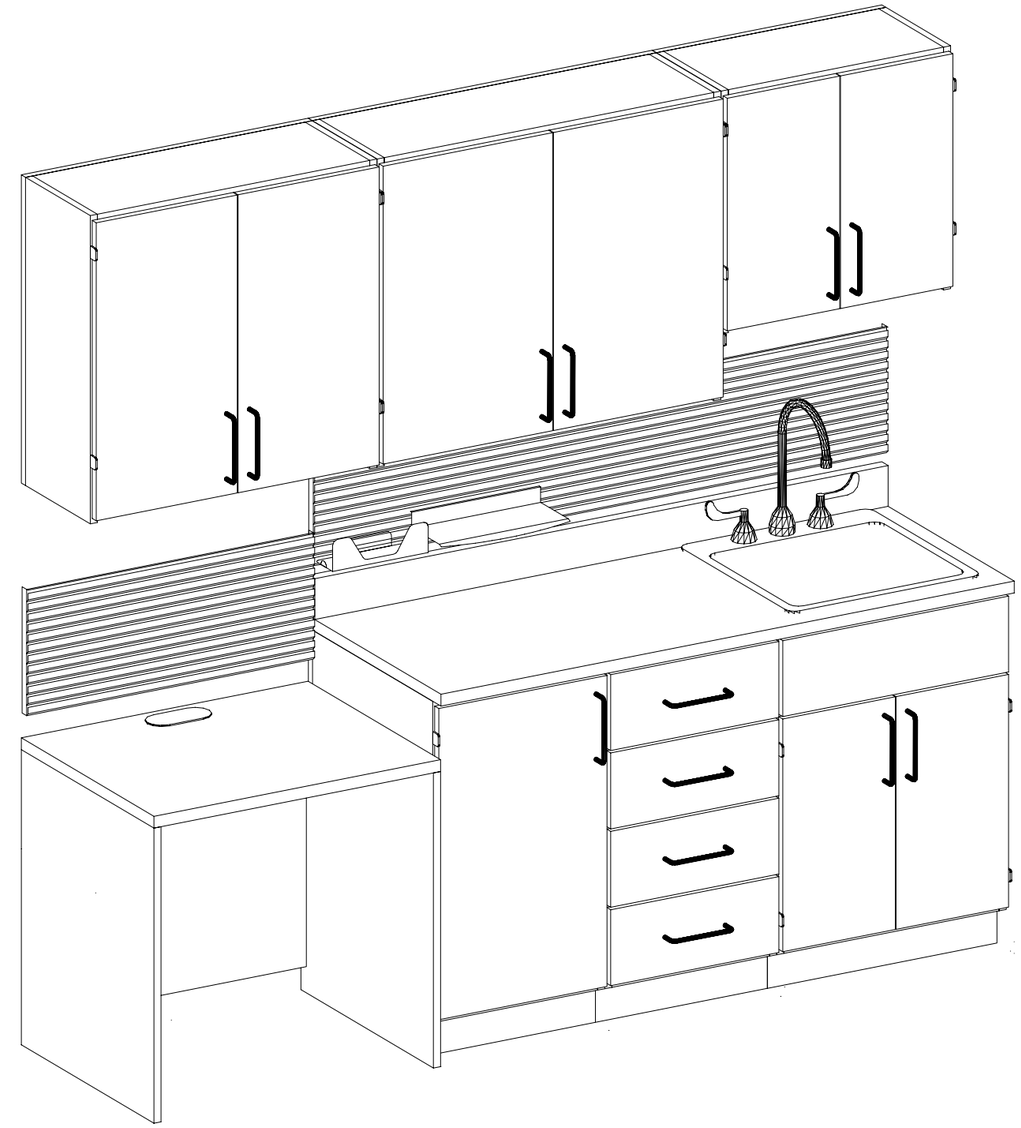

1 Q-101 3D VIEW - EC1-L

SCALE: N.T.S.

DATE	REVISIONS	INIT.

DENALI COMMISSION ALASKA

ALASKA NATIVE TRIBAL HEALTH CONSORTIUM

DIVISION OF ENVIRONMENTAL HEALTH AND ENGINEERING
1901 SOUTH BRAGAW STREET, SUITE 200
ANCHORAGE, ALASKA, 99508-3440
(907) 729-3600

ALASKA NATIVE TRIBAL HEALTH CONSORTIUM

McGRATH SUB-REGIONAL HEALTH CENTER
FURNISHING PLAN

FILE NAME:
PROJECT NO: 0198
PROJ ARCH. BK

DATE: 3/25/2009
SCALE: AS NOTED
DRAWN BY:

SHEET
Q-102

2 OF 6Q

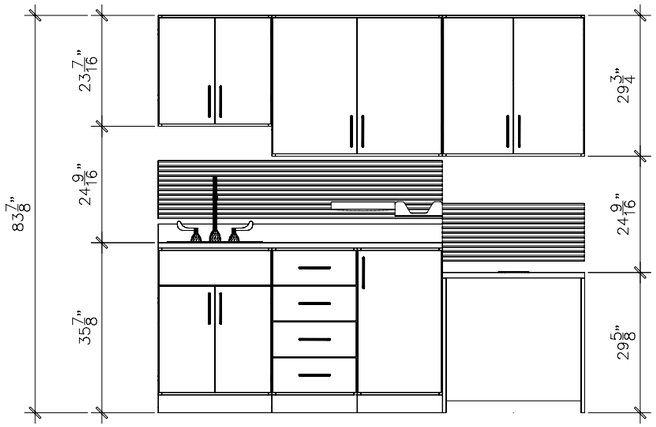

2 Q-101 ELEVATION - EC1-R

SCALE: 3/4"=1'-0"

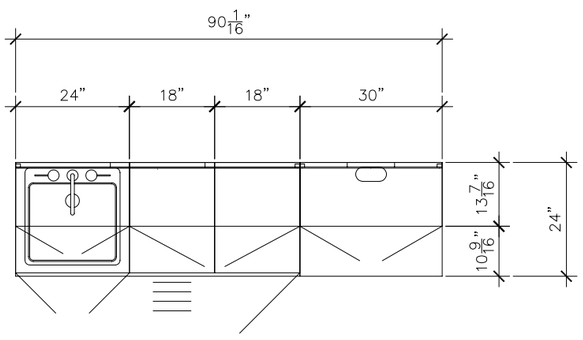

2 Q-101 PLAN - EC1-R

SCALE: 3/4"=1'-0"

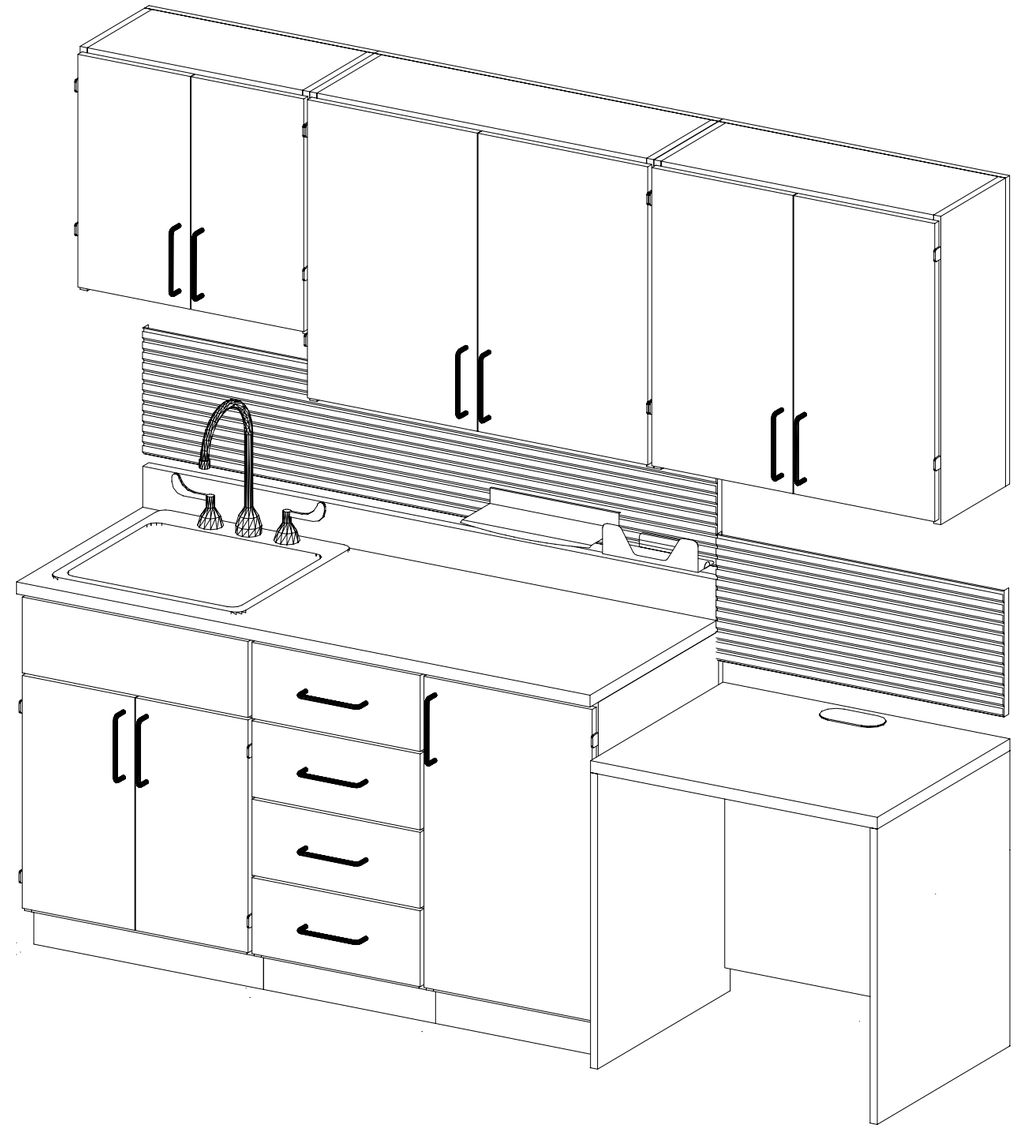

2 Q-101 3D VIEW - EC1-R

SCALE: N.T.S.

DATE	REVISIONS	INIT.

DENALI COMMISSION ALASKA

ALASKA NATIVE TRIBAL HEALTH CONSORTIUM

DIVISION OF ENVIRONMENTAL HEALTH AND ENGINEERING
1901 SOUTH BRAGAW STREET, SUITE 200
ANCHORAGE, ALASKA, 99508-3440
(907) 729-3600

ALASKA NATIVE TRIBAL HEALTH CONSORTIUM

McGRATH SUB-REGIONAL HEALTH CENTER

FURNISHING PLAN

DATE: 3/25/2009
SCALE: AS NOTED
DRAWN BY:

FILE NAME:
PROJECT NO: 0198
PROJ ARCH. BK

SHEET Q-103

3 OF 6Q

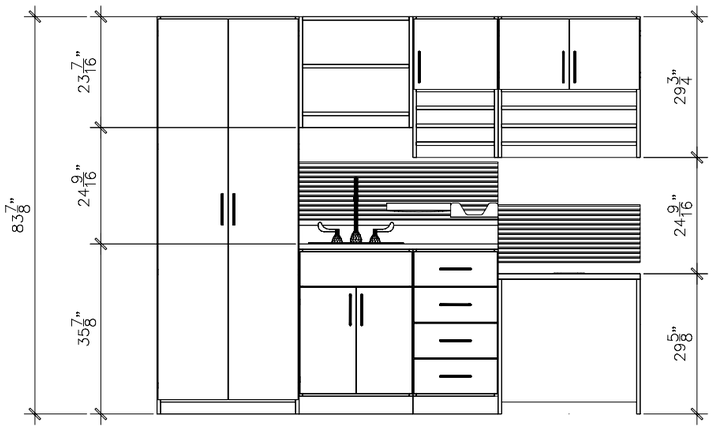

3 Q-10 ELEVATION - EC2

SCALE: 3/4"=1'-0"

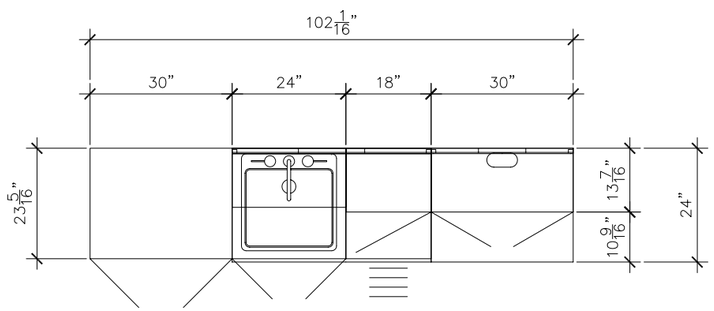

3 Q-10 PLAN - EC2

SCALE: 3/4"=1'-0"

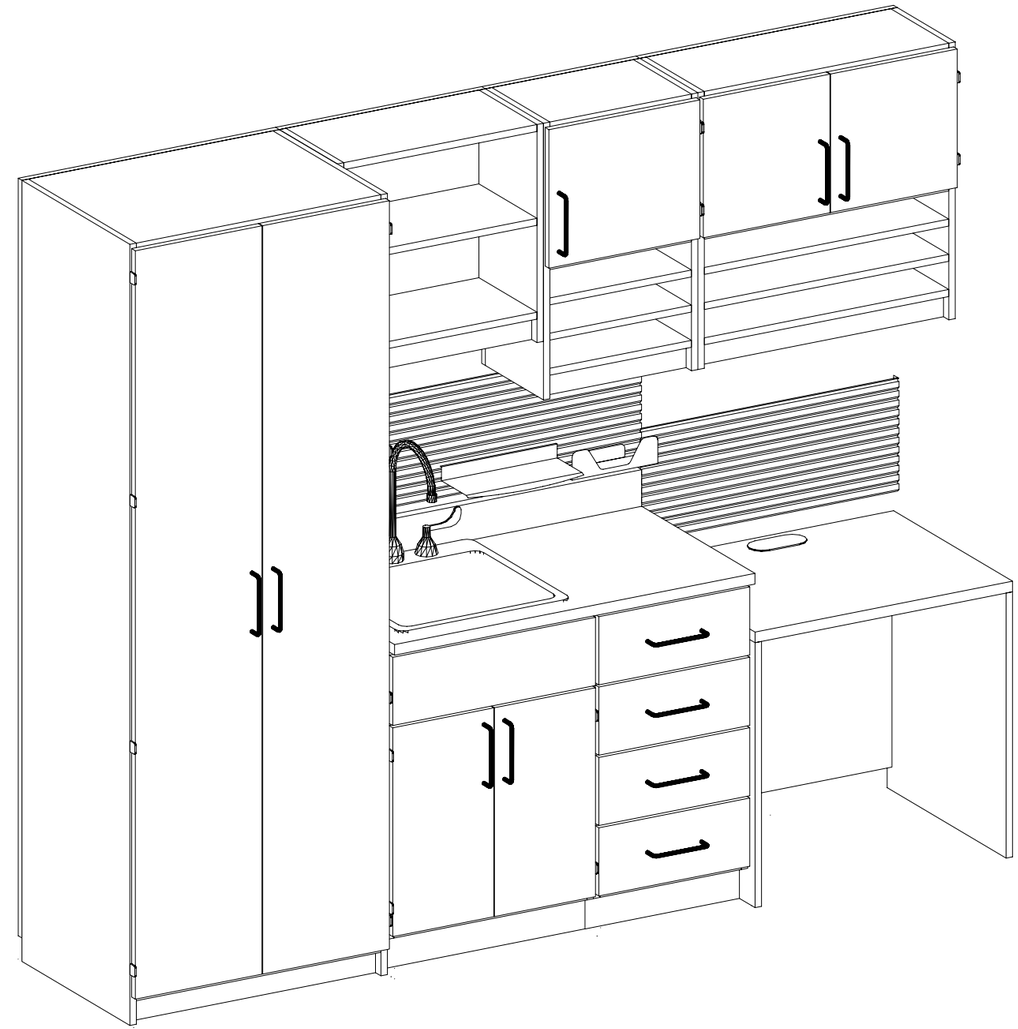

3 Q-10 3D VIEW - EC2

SCALE: N.T.S.

DATE	REVISIONS	INIT.

DENALI COMMISSION ALASKA

ALASKA NATIVE TRIBAL HEALTH CONSORTIUM

DIVISION OF ENVIRONMENTAL HEALTH AND ENGINEERING
1901 SOUTH BRAGAW STREET, SUITE 200
ANCHORAGE, ALASKA, 99508-3440
(907) 729-3600

ALASKA NATIVE TRIBAL HEALTH CONSORTIUM

McGRATH SUB-REGIONAL HEALTH CENTER
FURNISHING PLAN

DATE: 3/25/2009
SCALE: AS NOTED
DRAWN BY:

FILE NAME:
PROJECT NO: 0198
PROJ ARCH. BK

SHEET
Q-104

4 OF 6Q

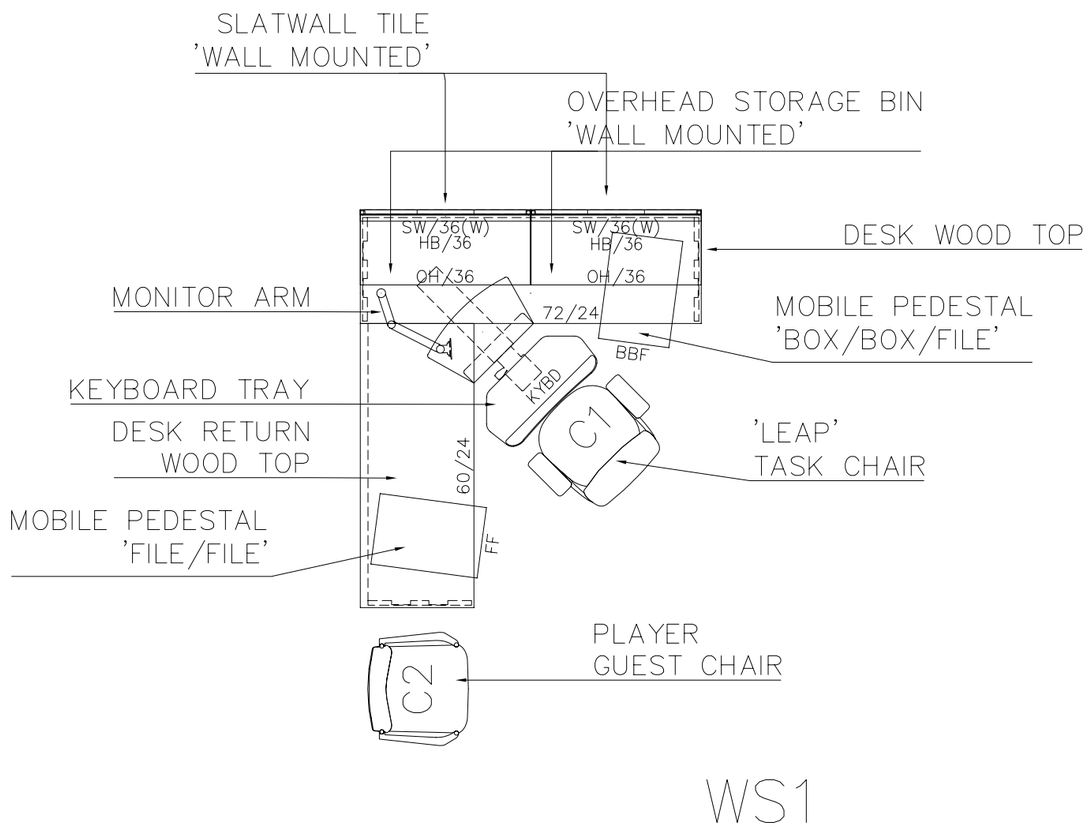

WS1 Q-101 PLAN - OFFICE WORKSTATION

SCALE: 3/4"=1'-0"

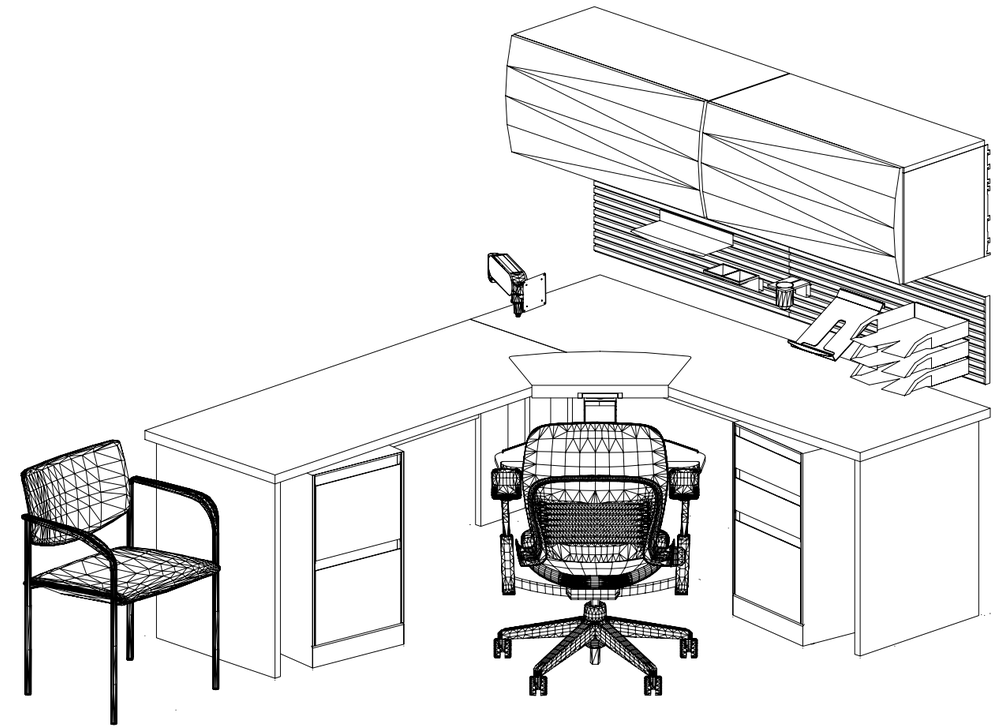

WS1 Q-101 3D VIEW - OFFICE WORKSTATION

SCALE: N.T.S.

DATE	REVISIONS	INIT.

DENALI COMMISSION ALASKA

ALASKA NATIVE TRIBAL HEALTH CONSORTIUM

DIVISION OF ENVIRONMENTAL HEALTH AND ENGINEERING
1901 SOUTH BRAGAW STREET, SUITE 200
ANCHORAGE, ALASKA, 99508-3440
(907) 729-3600

McGRATH SUB-REGIONAL HEALTH CENTER

FURNISHING PLAN

DATE: 3/25/2009
SCALE: AS NOTED
DRAWN BY:

FILE NAME:
PROJECT NO: 0198
PROJ ARCH. BK

SHEET
Q-105

5 OF 6Q

FURNITURE LEGEND:	
C1	'LEAP' TASK CHAIR
C2	'PLAYER' GUEST CHAIR
C3	'VERGE' STOOL
C4	'REINHARD' CONFERENCE CHAIR
C5	'SIESTA' SLEEPER
C6	OUTLOOK 'HAWTHORNE' SINGLE SEAT, ARM, CHAIR
C6A	OUTLOOK 'HAWTHORNE' BARIATRIC, SINGLE SEAT CHAIR
C7	OUTLOOK 'HAWTHORNE' TABLE, WD EDGE
T1	'CONVENE' CONFERENEC TABLE, LAMINATE, WD EDGE WITH TWO POWER UNITS
T2	'AU LAIT' TABLE, LAMINATE, WD EDGE
T3	'ARRIVA' TABLE, LAMINATE
S1	LATERAL FILE, 4 DRAWER
S2	'SHAKER' WARDROBE, WOOD, DOUBLE DOOR W/DRAWER
S3	HIGH DENSITY FILING, OPEN SHELF, LEGAL
ET1	'ACCESS' HIGH-LOW EXAM TABLE
WR	WASTE CAN, SQUARE STEEL
CH	COAT HOOK

FURNITURE LEGEND:	
WS1	OFFICE WORKSTATION
EC1	EXAM RM CASEGOODS
EC2	TRAUMA EXAM CASEGOODS

FURNITURE LEGEND

DATE	REVISIONS	INIT.

DENALI COMMISSION ALASKA

ALASKA NATIVE TRIBAL HEALTH CONSORTIUM

DIVISION OF ENVIRONMENTAL HEALTH AND ENGINEERING
1901 SOUTH BRAGAW STREET, SUITE 200
ANCHORAGE, ALASKA, 99508-3440
(907) 729-3600

ALASKA NATIVE TRIBAL HEALTH CONSORTIUM

McGRATH SUB-REGIONAL HEALTH CENTER
FURNISHING PLAN

DATE: 3/25/2009
SCALE: AS NOTED
DRAWN BY:

FILE NAME:
PROJECT NO: 0198
PROJ ARCH. BK

SHEET
Q-106

6 OF 6Q

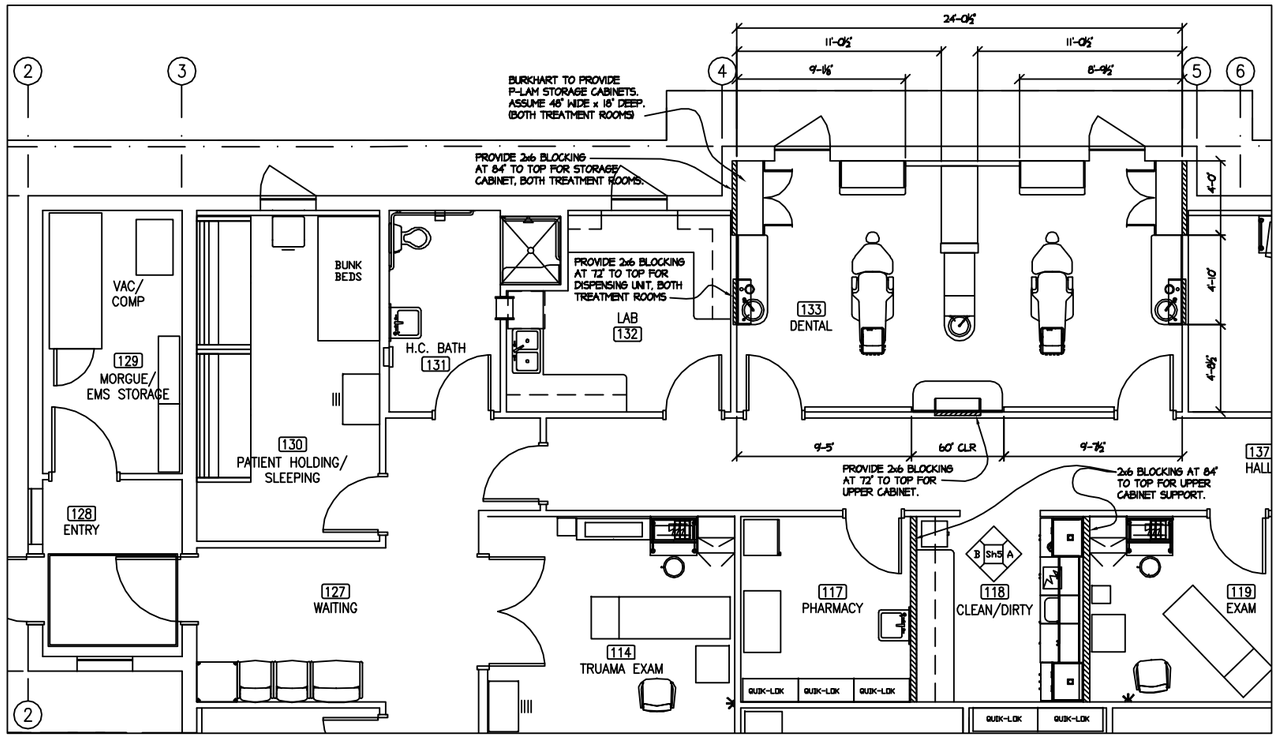

FLOOR & BRACING PLAN

APPROX. 600 USEABLE SQ. FT. (LEASEHOLD AREA MAY VARY)

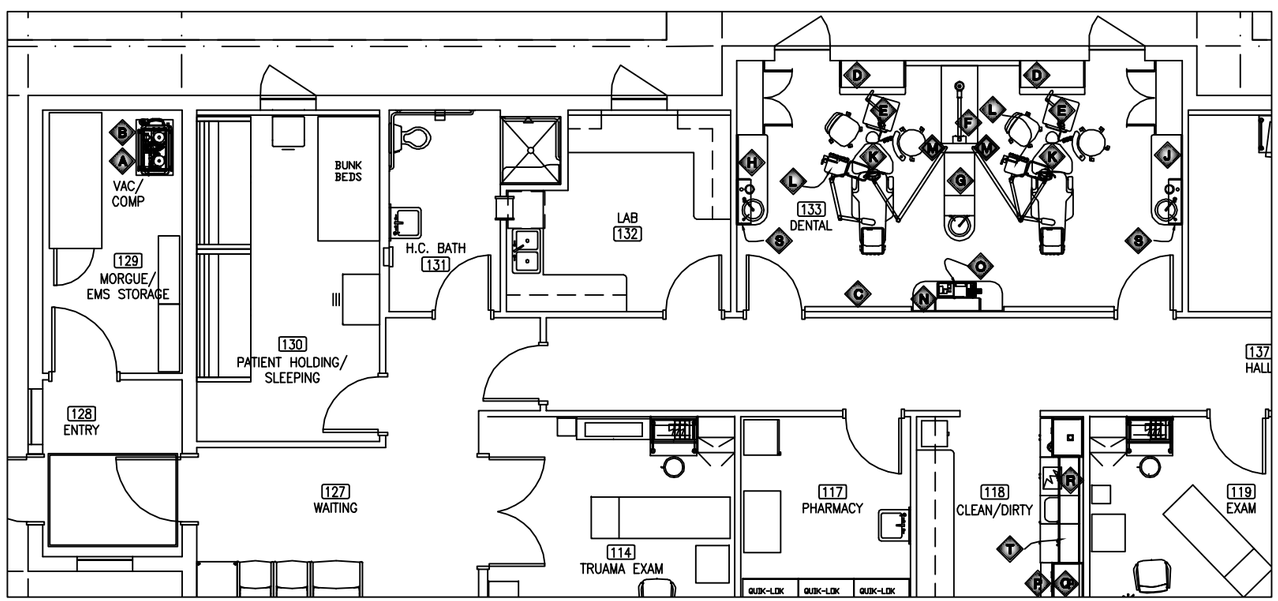

EQUIPMENT SCHEDULE PLAN

DENTAL EQUIPMENT PLACEMENT SCHEDULE

ITEM #	MANUFACTURER/DESCRIPTION	MODEL #	QUANTITY	FURNISHED & INSTALLED BY: B=BURKHART O=OTHERS	ANCHORED TO: FLOOR, WALL, OR CEILING	REMARKS/DETAILS
A	AIR TECHNIQUES DENTAL VACUUM SYSTEM	STS 6	1	FB IB	MECH ROOM	
B	AIR TECHNIQUES DENTAL AIR SYSTEM	AIRSTAR 30	1	FB IB	MECH ROOM	
C	AIR TECHNIQUES REMOTE CONTRAL PANEL	–	1	FB IB	WALL MOUNT	
D	ADEC TREATMENT CONSOLE	5580.42	2	FB IB	SITS ON FLOOR	
E	ADEC ASSISTANT'S DELIVERY UNIT	4635	2	FB IB	ATTACH TO 5580	
F	PLANMECA INC. INTRAORAL X-RAY SYSTEM	INTRA	1	FB IB	CABINET MOUNT	
G	ADEC CENTRAL CONSOLE	5543.TB	1	FB IB	SITS ON FLOOR	
H	ADEC ACCESSORY CONSOLE	5531.58	1	FB IB	SITS ON FLOOR	SINK LEFT
J	ADEC ACCESSORY CONSOLE	5531.58	1	FB IB	SITS ON FLOOR	SINK RIGHT
K	ADEC CASCADE DENTAL CHAIR	1040	2	FB IB	SITS ON FLOOR	
L	ADEC RADIUS DELIVERY SYSTEM	2122	2	FB IB	ATTACH TO CHAIR	
M	ADEC PREFERENCE MOUNT CABINET LIGHT	6300	2	FB IB	ATTACH TO CENTRAL	
N	ADEC ACCESSORY CONSOLE	5531.58	1	FB IB	SITS ON FLOOR	ROUNDED BOTH ENDS NO SINK PACKAGES
O	AIR TECHNIQUES FILM PROCESSOR	PERIPRO	1	FB IB		
P	SCICAN STERILIZER	STATIM 2000	1	FB IB		
Q	ADEC STERILIZER	LIZA	1	FB IB		
R	WHALEDENT RECESSED ULTRASONIC CLEANER	UC300R	1	FB IB		
S	ADEC DISPENSING UNIT	5730.29	2	FB IB		
T	SCICAN DISTILLER SYSTEM	AQUASTATIC	1	FB IB	VERIFY LOCATION	

GENERAL NOTES

Listed requirements show only the services, connections and fixtures required for the dental office equipment shown; and these drawings do not provide for the electrical, mechanical and structural requirements for the building or office as a whole.

1) These drawings are going to be used as coordination drawings for the General contractor. The general is obligated to coordinate rough-ins dimensions with Burkhart.

2) General contractor to schedule walk-through meeting with all applicable contractors and a Burkhart representative to review dental equipment details, manufacturer's specification sheets and manufacturer's templates before commencing construction. The personnel actually doing the work must be present at this meeting. This usually takes place after the framing has been completed and before any mechanical has been run. If pouring of a concrete slab is involved, then this meeting must take place prior to that event.

At this meeting we will furnish or make available any templates and plans necessary for the placement of electrical, plumbing and backing for the dental equipment we will be providing. If the doctor is reusing some of his or her existing equipment, then the contractor is responsible for making sure that the appropriate connections are provided. Although we will help as much as possible, it will most likely require a trip by the contractor to the doctor's existing office.

3) General contractor to schedule rough-in inspection with all applicable contractors and a Burkhart representative to inspect all dental plumbing and wiring prior to sheetrocking or pouring of concrete. Our office needs to be notified at least 72 hours in advance for the Burkhart branch office city area and 72 hours for all areas outside city limits. If the general contractor elects to continue without an inspection by our office, then he assumes all responsibilities for missing or incorrectly installed mechanical services.

4) Any Burkhart or tenant provided items requiring installation by contractor during construction will be delivered to job site. When the contractor or his representative takes possession of these items, he becomes responsible for their safekeeping and condition.

5) Burkhart equipment installation requires approximately 1-2 days for each operatory, however time may vary depending on the configuration of equipment. Contractor to schedule with Burkhart the number of days needed at least thirty days in advance. Schedule required days for after completion of construction and before occupancy of tenant.

6) The contractor shall obtain and pay for all permits. The contractor shall coordinate and schedule all required code official inspections.

7) Contractor to verify with tenant all items (including their dimensions and their mechanical requirements) that are not supplied by Burkhart. These items might include but are not limited to: dishwasher, trash compactor, clothes washer and dryer, etc.

8) Notify Burkhart if ceiling height in the opertories is less than 7'-8" (92"). Ceiling height may effect equipment installation.

NOTE:

All framing, bracing, door sizes, floor levels, cabinet heights, rest room and lunch room facilities (if any) and other design details should be modified to comply with latest Americans With Disabilities Act (A.D.A.) guidelines and similar State requirements. Architect or Contractor must submit plans to building and other local officials as necessary for compliance with all Federal, State and Local building codes, including A.D.A. guidelines, before commencing work. Notify Burkhart of any changes that would modify any dental treatment rooms and/or any dental cabinet layout.

The Contractor should furnish all electrical, plumbing, and structural requirements listed, as this is necessary before the dental equipment can be installed. Burkhart, will furnish the dental equipment. Check all measurements with the actual building dimensions, or Architect's plans. The specifications shown on this plan have not been checked for compliance with Federal, State or Local building codes and regulations.

Listed requirements show only the services, connections and fixtures required for the dental office equipment shown; and these drawings do not provide for the electrical, mechanical and structural requirements for the building or office as a whole.

See Mechanical and Electrical Sheets for further information.

THIS IS A SUGGESTED PLAN WITH SPECIFICATIONS FOR THE DENTAL EQUIPMENT ONLY.

LEGEND

(A) All wood backing and bracing to be of fire resistant or substitute for other material if required by local code. Verify structural application with Burkhart and architect / designer.

(B) Notify Burkhart if ceiling height in the operatories is less than 7'-8" (92"). Ceiling height may effect equipment installation.

Miscellaneous wood backing, see notes for details. Verify size and location with Burkhart Dental. All dental x-rays require backing.

See manufacturer's templates provided by Burkhart.

DO NOT SCALE FROM THESE DRAWINGS. USE CALLED-OUT DIMENSIONS ONLY.

DENTAL EQUIPMENT SPECIFIC TO THESE SPECIFICATIONS CAN BE AQUIRED FROM:

BURKHART
DENTAL SUPPLY COMPANY
2502 South 78th Street
Tacoma, Washington 98409
* * * * * * * * * * * * * * *
12000 Industry Way, Unit N-1
Anchorage, Alaska 99515
Attn: Carter Barnes
Phone: 1-866-324-1983
Fax: 1-866-947-2978

DENALI COMMISSION ALASKA

DATE	REVISIONS	INIT.

ALASKA NATIVE TRIBAL HEALTH CONSORTIUM
DIVISION OF ENVIRONMENTAL HEALTH AND ENGINEERING
1901 SOUTH BRAGAW STREET, SUITE 200
ANCHORAGE, ALASKA 99508-3440
(907) 729-3600

McGRATH SUB-REGIONAL HEALTH CENTER
DENTAL PLAN

DATE: 4/20/2009
SCALE: AS NOTED
DRAWN BY: TWS
FILE NAME:
PROJECT NO: 0198
PROJ ARCH. BK

SHEET D-101

1 OF 5D

ELECTRICAL & PLUMBING LEGEND

ALL ITEMS NOT MARKED WITH A CHECK ARE NOT APPLICABLE TO THIS JOB

A) All electrical outlets and locations of utility callouts are to be measured to the bottom of a 2x4 or 4x4 electrical box. Electrical outlets not specified are 18" above floor or 6" above countertop. All outlets above countertop should be verified with cabinet elevations for conflict with backsplashes, etc.

B) If dimensions of electrical and utility locations are not specified, verify and discuss locations with Burkhart and designer and owner / tenant.

C) If required by code, provide a separate disconnect switch for each x-ray location, verify.

D) Burkhart equipment installers are not licensed contractors. Consequently, the final "hard" electrical and plumbing connections must be made by the applicable contractors at the time of equipment installation.

E) Recommended lighting information:
- a) Strip type fluorescent task lighting mounted under upper wall-hung cabinetry. Verify locations with doctor.
- b) See plans by others for general and decorative lighting and wall switching.
- c) Provide minimum 150-200 foot-candles illumination at countertop height (30-32") in all operatories. This level of illumination is typically achieved with 12-4' fluorescent tubes (3-4 tube fixtures or 2-6 tube fixtures), configured above operatory work surfaces, with fixtures using a 78 cell parabolic louver and clear flat acrylic overlay. Fluorescent tubes should meet the following specifications:
  - Color Rendering Index (CRI): 90 or above
  - Color Preference Index (CPI): 90 or above
  - Spectral Energy Distribution (SED): Natural Daylight
  - Color Temperature in Degrees Kelvin (K): 5500 K
  - Wattage: 40
  - Examples of tubes that meet these general specifications: GE Chroma 50, Aurora V, Spectralite, Vitalite.

F) The contractor shall verify location and design of building utilities, including water, gas, air, vacuum, vents, electrical and waste lines in remainder of drawing set.

G) Notify Burkhart if ceiling height in the operatories is less than 7'-8" (92"). Ceiling height may effect equipment installation.

H) All equipment, including low voltage items, which requires hard wiring to be connected by contractor.

I) Some of the dental equipment provided by Bukhart requires mud rings, rough-in boxes, and cover plates. Contractor provide and install as required per manufacturer's instructions.

J) Data processing equipment, terminal locations and wiring by others.

K) All vacuums to be hooked up by contractor as well as sinks, mixing valves, nitrous controls and outlets, developing tanks, etc.

L) Many areas require back flow prevention--consult local codes and install as necessary.

---

110 volt duplex outlet. (Additional outlets may be required if noted with specific equipment.) See plans by others for any additional outlets.

(L) Dental operating light location. Provide 110 volt electrical per manufacturer's specifications. This product draws 3 amps. Confer with Burkhart for ceiling height requirements. Provide wood backing per mfg's specifications. See bracing / backing for more information. Flex whip to the area hole drilled to transformer box at install. Light is switched.
- ☑ See manufacturer's templates provided by Burkhart.

Dental x-ray component location. Provide 110 volt wiring on separate grounded circuit from circuit panel to each location. This product draws 8 amps. Confer with Burkhart for ceiling height requirements.
- ☐ Requires data processing equipment
- ☐ Provide and install disconnect switch for each x-ray head location.
- ☑ See manufacturer's templates provided by Burkhart.

X-ray remote switch location. Single gang box. Button and cover provided by Burkart.
- ☑ Provide the required number of stranded color coded wires from (◮) OR (▲) locations as noted on plan and per manufacturer's specifications.
- ☐ Install mfg provided cables from Burkhart.
- ☑ See manufacturer templates provided by Burkhart for termination information.

(EN) Indicates conduit stub-out location. Provide 2" conduit unless noted otherwise. Consult B.D.S. for details. Do not connect stub-outs.
- — · — Indicates conduit and / or cable routing. Indicates cable routing
- ☐ Conduit to be installed continuously between stub-outs where indicated.
- ☐ Contractor install CAT-5 cabling to all (EN) locations.

Exhaust fan or other. Provide and switch separately at convenient wall location. When installed in a mechanical room, exhaust fan should be thermostatically controlled. Must supply adequate air intake to allow airflow through room. Maintain temperatures between 40 and 90 degrees F. Mechanical room equipment produces heat:

Air Compressor	2252	BTU/hour
Vacuum	13649	BTU/hour
Distiller		BTU/hour

FORCED AIR AND HVAC INPUT MUST BE USED IN ADDITION TO AN EXHAUST FAN IF NORMAL AMBIENT TEMPERATURES VARY FROM SPECIFIED OPERATING TEMPERATURE RANGE. See plans by others for additional exhaust fans that may be required.

(S) Provide wall switch at height indicated. Provide general illumination switches at heigher height in dark room.

(E-1) Dental unit utility center location.
- ☑ Provide 110 volt hardwire connection. This product draws 8 amps.
- ☐ Provide 110 volt outlet. This product draws ____ amps.
- ☑ Provide compressed air for instrumentation devices with shut-off valves, (3/8" angle stop valves or 3-piece ball valves as required by local codes.)
- ☑ Provide vacuum.
- ☐ Provide waste.
- ☐ Provide gas.
- ☐ Provide hot water.
- ☐ Provide cold water.
- ☐ Provide low voltage wires.
- ☑ See manufacturer's templates provided by Burkhart.

(E-2) Dental unit utility center location.
- ☐ Provide 110 volt hardwire connection. This product draws ____ amps.
- ☑ Provide 110 volt outlet. This product draws 8 amps.
- ☑ Provide compressed air for instrumentation devices with shut-off valves, (3/8" angle stop valves or 3-piece ball valves as required by local codes.)
- ☐ Provide vacuum.
- ☐ Provide waste.
- ☐ Provide gas.
- ☐ Provide hot water.
- ☐ Provide cold water.
- ☐ Provide low voltage wires.
- ☑ See manufacturer's templates provided by Burkhart.

(AC) Dental compressed air for instrumetation devices location. NFPA 99C Level 3 installation. Provide (3 wire w/ground), single phase wiring per manufacturer's specifications. Provide 1/2" minimum I.D. copper air lines to termination locations as noted on plan. Provide 3/8" angle stop valves or 3-piece ball valves as required by local codes. Install wires to control panel location per mfg specifications. See (CP) symbol. Notify Burkhart of voltage variance in building electrical supply. See Burkhart for details. Provide 2" intake to fresh air, per NFPA.
- ☐ Provide 110 volt dedicated circuit. This product draws ____ amps.
- ☑ Provide 220 volt 30 amp dedicated circuit. This product draws 8 amps.
- ☐ Hardwire connection.
- ☑ Provide receptacle. Verify finish configuration with Burkhart Dental.
- ☑ See manufacturer's templates provided by Burkhart.

(VAC) Central dental vacuum motor pump location. NFPA 99C Level 3 installation. Provide (3 wire w/ground), single phase wiring per manufacturer's specifications. Provide waste drain to sewer. Provide under floor piping continuous to locations shown and size per plan and mfg. specs. Install wires to control panel location per mfg. specs. See (CP) symbol. Provide 2" or ___3" exhaust to outside of building for exhaust of pump per mfg. specs., per NFPA. Notify Burkhart of voltage variance in building electrical supply.
- ☐ Provide ____ (quantity) cold water hook-up(s).
- ☑ Provide cold water location, 3/4" hose bib.
- ☐ Provide ____ 110 volt dedicated circuit(s). This product draws ____ amps.
- ☑ Provide 1 220 volt 40 amp dedicated circuit(s). This product draws 26 amps.
- ☐ Hardwire connection.
- ☑ Provide receptacle. Verify finish configuration with Burkhart Dental.
- ☑ Sewer drain to be ____ wall drain, ____ floor sink, 6" as dictated by building design and / or local codes.
- ☑ Exhaust piping to tolerate 180 degrees Fahrenheit.
- ☑ See manufacturer's templates provided by Burkhart.

(CP) Location of control panel for low voltage switching. Control panel supplied by Burkhart. Provide 3#18 wires to each 1 vacuum pump, 1 compressor, ____ water shut-off valve.
- ☐ Provide 1/4" polyflow tubing to compressed air line.
- ☐ Provide 1/4" polyflow tubing to vacuum line.
- ☑ See manufacturer's templates provided by Burkhart.

(DIST) Distiller location.
- ☐ Provide cold water.
- ☐ Provide drain. Drain piping required to withstand 160 degrees Fahrenheit.
- ☐ Provide 110 volt dedicated circuit. This product draws ____ amps.
- ☐ Provide 220 volt dedicated circuit. This product draws ____ amps.

(SK) Sink and hardware part of dental equipment supplied by Burkhart. Contractor provide plumbing (including hot water, cold water, drain) and electrical requirements, provide final connection components and do final connections. Some sinks may require loop venting, verify.
- ☐ Provide 110 volt power.
- ☑ Provide compressed air for gas-powered devices per manufacturer's specifications.
- ☐ Plumber to set sinks in countertops. Verify location with Burkhart Dental.
- ☑ See manufacturer's templates provided by Burkhart.

Recessed ultrasonic cleaner. Provide 110 volt outlet at 24" above finished floor. This product draws 6 amps.
- ☑ Supply dishwasher type drain "T" with hose bib fitting to nearest sink, "T" to be 23" maximum height.
- ☐ Provide quad electrical box for remote timer at 44" directly above unit with 1" conduit terminating at 24" adjacent to duplex 110 volt outlet below counter.
- ☐ Provide hot water
- ☐ Provide cold water
- ☐ Provide separate drain for ultrasonic.
- ☑ See manufacturer's templates provided by Burkhart.

(ST) Sterilizer location.
- ☑ Provide 110 volt dedicated circuit. This product draws 12 amps.
- ☑ Provide 220 volt dedicated circuit. This product draws 9.2 amps.
- ☐ Provide drain.
- ☐ Provide cold water.
- ☐ Provide hot water.
- ☑ See manufacturer's templates provided by Burkhart.

(SK) **VERIFY WITH TENANT ALL SPECIFICATIONS, TYPICAL.**

Sink. Contractor or others furnish and install sinks (including hot water, cold water, drain), hardware and shut-off valves. Sinks to be acid resistant porcelain or stainless steel unless otherwise specified. Note: Typical sink size and type where applicable:
Provide foot controlled faucets or electric eye faucets as desired by tenant.
Some sinks may require loop venting, verify.
- ☐ Operatories: 15" x 15" bar sink with strainer, 4" gooseneck, and wing handle.
- ☐ Dark room:
  - ☐ 15" x 15" x 10" single compartment sink with 8" faucet and sprayer.
  - ☐ 25" x 22" x 10" single compartment sink with 8" faucet and sprayer.
- ☐ Lab:
  - ☐ 15" x 15" x 8" single compartment sink with 8" faucet and sprayer.
  - ☐ 25" x 22" x 10" single compartment sink with 8" faucet and sprayer.
- ☐ Sterile: 25" x 22" x 10" single compartment sink with 8" faucet and sprayer.
- ☐ Lavatory and staff lounge: per building standards or tenant specs.

(A) Compressed air for gas-powered devices valve location. Contractor furnish and install 3/8" compression angle stop or 3-piece ball valve as required by local codes.

SUGGESTED PIPING LAYOUT, SEE MFG SPECIFICATIONS, TYPICAL.

AIR LINES — Run 1/2" I.D. copper air line. Terminate all locations with 3/8" compression angle stop shut off valves or 3-piece ball valves as required by local codes.
Terminate 1" above finished floor unless otherwise specified.
Provide 24 hour leak test at 100 PSI with oilless clean air.
Where indicated rough-in, cap lines for future use.

Dental vacuum lines. Use only schedule 40 PVC pipe (or copper) if required by local code. Slope 1/4" for every 10 feet of run toward pump location. Avoid 90 degree angles when possible. See termination schedule. Final hook up by plumber. Vacuum lines to run sub grade and to follow crawlspace layout.

• Indicates termination point.

PLUMBING TERMINATIONS FOR EQUIPMENT
REQUIRED BY SERVICE DEPARTMENT

Vacuum Systems:
Operatory – 1-1/2" stub up in each operatory terminating in 3/4" female pipe thread
Pump – 1-1/2" – 2" (VERIFY) female pipe thread
Water – 3/8" compression fitting (angle stop)

Compressed air for Instrumentation Devices Systems:
At compressor – 1/2" female pipe thread
In operatory – 3/8" compression angle stop or 3-piece ball valves as required by local codes

Automatic Processor:
Water – 3/4" male "garden hose" bib fitting
Drain – separate "P" trap for processor
Handpiece Delivery System sin Operatories:
Water – 3/8" compression fitting (Angle Stop)
Air – See air compressor systems

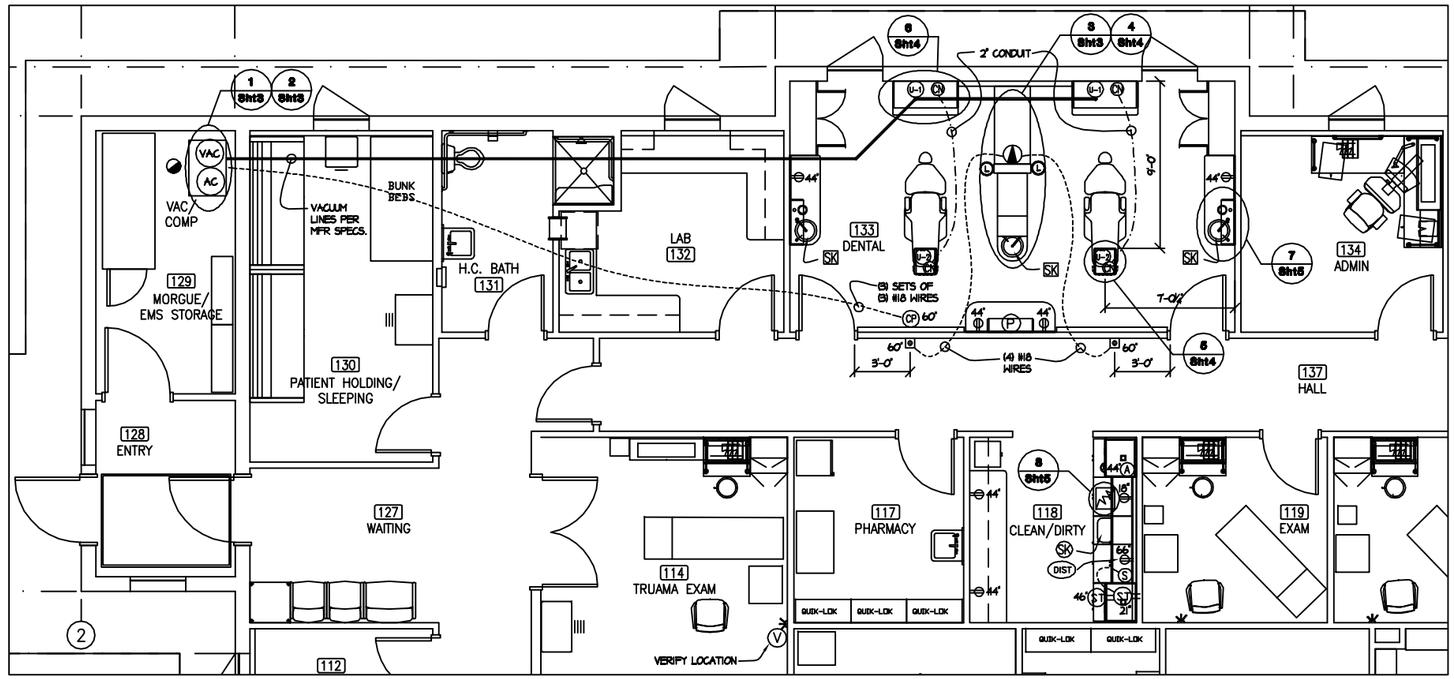

ELECTRICAL & PLUMBING PLAN

DENTAL EQUIPMENT SPECIFIC TO THESE SPECIFICATIONS CAN BE AQUIRED FROM:

BURKHART
DENTAL SUPPLY COMPANY
2502 South 78th Street
Tacoma, Washington 98409
* * * * * * * * * * * * * *
12000 Industry Way, Unit N-1
Anchorage, Alaska 99515
Attn: Carter Barnes
Phone: 1-866-324-1983
Fax: 1-253-212-4981

DO NOT SCALE FROM THESE DRAWINGS. USE CALLED-OUT DIMENSIONS ONLY.

NOTE:

All framing, bracing, door sizes, floor levels, cabinet heights, rest room and lunch room facilities (if any) and other design details should be modified to comply with latest Americans With Disabilities Act (A.D.A.) guidelines and similar State requirements. Architect or Contractor must submit plans to building and other local officials as necessary for compliance with all Federal, State and Local building codes, including A.D.A. guidelines, before commencing work. Notify Burkhart of any changes that would modify any dental treatment rooms and/or any dental cabinet layout.

The Contractor should furnish all electrical, plumbing, and structural requirements listed, as this is necessary before the dental equipment can be installed. Burkhart, will furnish the dental equipment. Check all measurements with the actual building dimensions, or Architect's plans. The specifications shown on this plan have not been checked for compliance with Federal, State or Local building codes and regulations.

Listed requirements show only the services, connections and fixtures required for the dental office equipment shown; and these drawings do not provide for the electrical, mechanical and structural requirements for the building or office as a whole.

See Mechanical and Electrical Sheets for further information.

THIS IS A SUGGESTED PLAN WITH SPECIFICATIONS FOR THE DENTAL EQUIPMENT ONLY.

DENALI COMMISSION ALASKA

DATE	REVISIONS	INIT.

ALASKA NATIVE TRIBAL HEALTH CONSORTIUM

DIVISION OF ENVIRONMENTAL HEALTH AND ENGINEERING
1901 SOUTH BRAGAW STREET, SUITE 200
ANCHORAGE, ALASKA 99508-3440
(907) 729-3600

McGRATH SUB-REGIONAL HEALTH CENTER
DENTAL PLAN

DATE: 4/20/2009
SCALE: AS NOTED
DRAWN BY: CFP
FILE NAME:
PROJECT NO: 0198
PROJ ARCH. BK

SHEET D-201

2 OF 5D

54900, 54910 & 54920 OVERALL DIMENSIONS

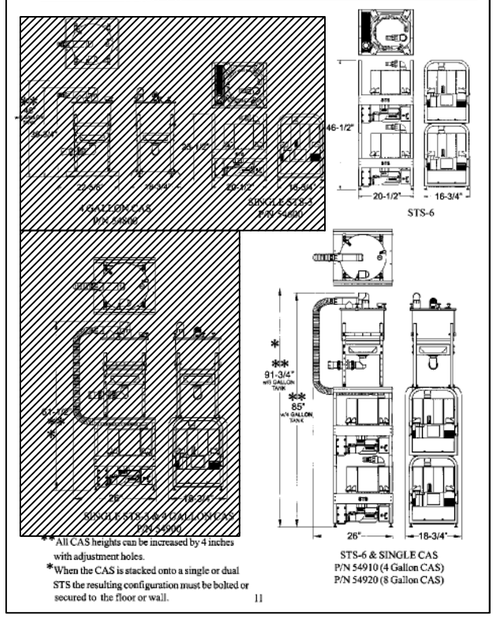

**All CAS heights can be increased by 4 inches with adjustment holes.

*When the CAS is stacked onto a single or dual STS the resulting configuration must be bolted or secured to the floor or wall.

STS-6 & SINGLE CAS
P/N 54910 (4 Gallon CAS)
P/N 54920 (8 Gallon CAS)

11

54900, 54910 & 54920 SPECIFICATIONS

SITE REQUIREMENTS

ELECTRICAL	STS-3 54900	STS-6 54910 54920
Minimum circuit breaker rating	20-A	2 each 20A 1 each 40A
Wire size AWG minimum gauge	#12	2 each #12 1 each #8
Receptacle	Nema 6-15 R	2 Nema 6-15 R
PLUMBING	**STS-3**	**2 STS-3 in Tandem**
Exhaust	2" sch. 40 pipe	2" sch. 40 pipe
Ambient Temperature	40° - 104° F (5° - 40° C)	40° - 104° F (5° - 40° C)
Main Line Diameter I.D. in Inches (min)	1-1/2"	1-1/2"
End Fitting At STS	1-1/2" FNPT	1-1/2" FNPT
Riser Diameter ID	1/2"	1/2"
Branch Line Dia. I.D. (min)	1"	1"
Drain Line	1-1/2" Schedule 40 Pipe	1-1/2" Schedule 40 Pipe
Wash-Out Line	3/4" Garden Hose	3/4" Garden Hose

***NOTE:** Suction piping must slope at least 1/4" for each 10 feet of run towards the pump. Use PVC Schedule 40 or Copper Type M.*

PRODUCT SPECIFICATION/DIMENSIONS

Branch Line Dia. I.D. (min)

ELECTRICAL	STS-3	STS-6
VOLTAGE (MIN/MAX)	200/230	200/250
FULL LOAD AMPS	12	26
STARTING AMPS	58	130
FREQUENCY	60Hz	60Hz
MAXIMUM VACUUM In Hg	14	14
VACUUM LEVEL (PRESET) In Hg	10	10
WEIGHT Lbs.	114	220
STS™ DIMENSIONS in.(WxDxH)	20-1/2 x 16-3/4 x 46-1/2"	20-1/2 x 16-3/4 x 46-1/2"
CAS™ DIMENSIONS in.(WxDxH)	22-5/8 x 18-3/4 x 46"	22-5/8 x 18-3/4 x 46"

1 AIR TECHNIQUES STS 6 VACUUM
NOT TO SCALE - SEE FULL SIZE TEMPLATES

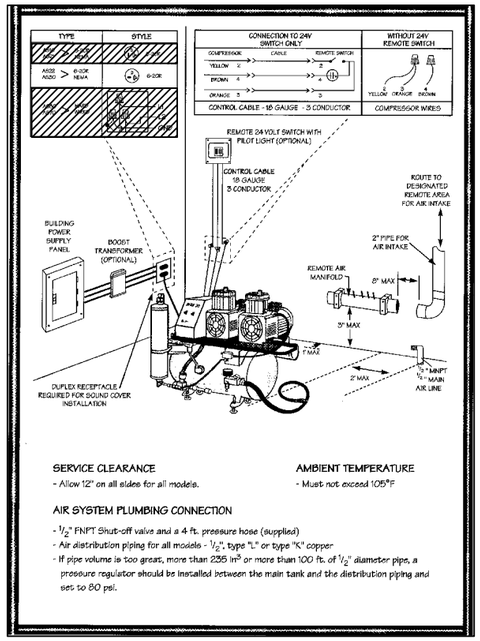

SERVICE CLEARANCE
- Allow 12" on all sides for all models.

AMBIENT TEMPERATURE
- Must not exceed 105°F

AIR SYSTEM PLUMBING CONNECTION
- 1/2" FNPT Shut-off valve and a 4 ft. pressure hose (supplied)
- Air distribution piping for all models - 1/2", type "L" or type "K" copper
- If pipe volume is too great, more than 235 in^3 or more than 100 ft. of 1/2" diameter pipe, a pressure regulator should be installed between the main tank and the distribution piping and set to 80 psi.

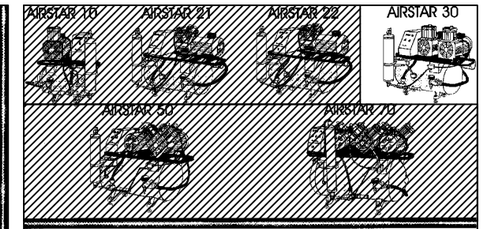

SITE REQUIREMENTS

ELECTRICAL	AIRSTAR 10	AIRSTAR 21	AIRSTAR 22	AIRSTAR 30	AIRSTAR 50	AIRSTAR 70
Voltage Min./Max.	200/250	200/250	200/250	200/250	200/250	200/250
Full Load Amps in. Circuit	3.0	4.0	6.0	8.0	12.0	14.0
Breaker Rating (Amps)	20	20	20	20	20	20
Min. Wire Size (AWG)	12	12	12	12	10	8

* Install a boost transformer if operate at below Rated Voltage

PRODUCT SPECIFICATION / DIMENSIONS

ELECTRICAL	AIRSTAR 10	AIRSTAR 21	AIRSTAR 22	AIRSTAR 30	AIRSTAR 50	AIRSTAR 70
HP	.75	1.0	1.5	1.5	2.0	2.5
Voltage Rating	115	115	200/230	208/230	208/230	208/230
Voltage Min./Max.	200/250	200/250	200/250	200/250	200/250	200/250
CFM (Cubic Ft./Min) @ RATED CAPACITY Peak / Continuous	3.4/2.4	4.5/3.2	4.6/3.4	4.6/2.7	6.0/3.5	10.0/7.0
PUMP-UP TIME 0-100 PSI (sec.) ±5%	165	145	145	150	135	135
RECOVERY TIME 80-100 PSI (sec.) ±5%	35	35	35	46	35	35
PURGE TIME 100-0 PSI (sec.)	90-100	90-100	90-100	90-100	100-120	100-120
TANK SIZE (cu. ft.) (US Gal.)	1.0	1.0	1.0	1.6 12	2.0	3.0
SHIPPING WEIGHT (lbs) (Approx)	165	170	175	255	285	295
DIMENSIONS in. (HxWxD)	24 x 24 x 18	24 x 24 x 21	24 x 24 x 21	29 x 26 x 21	31 x 26 x 21	31 x 26 x 21
HEIGHT W/ SOUND REDUCING COVER (in.)	26	26	26	32	34	34

2 AIR TECHNIQUES AIRSTAR 30 COMPRESSOR
NOT TO SCALE - SEE FULL SIZE TEMPLATES

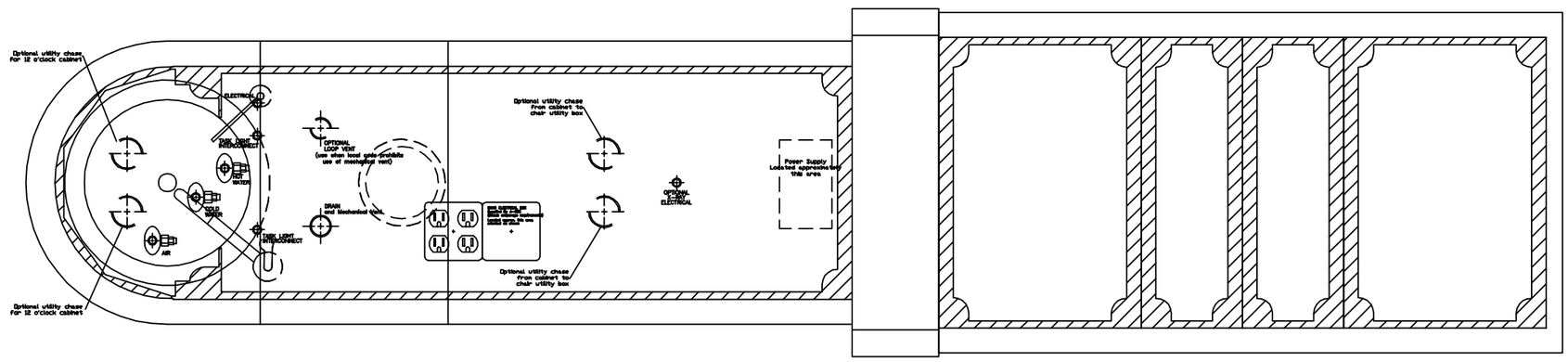

3 ADEC 5543 CENTRAL CONSOLE
NOT TO SCALE - SEE FULL SIZE TEMPLATE

DENTAL EQUIPMENT SPECIFIC TO THESE SPECIFICATIONS CAN BE AQUIRED FROM:

BURKHART
DENTAL SUPPLY COMPANY
2502 South 78th Street
Tacoma, Washington 98409
* * * * * * * * * * * * * *
12000 Industry Way, Unit N-1
Anchorage, Alaska 99515
Attn: Carter Barnes
Phone: 1-866-324-1983
Fax: 1-253-212-4981

DO NOT SCALE FROM THESE DRAWINGS.
USE CALLED-OUT DIMENSIONS ONLY.

NOTE:

All framing, bracing, door sizes, floor levels, cabinet heights, rest room and lunch room facilities (if any) and other design details should be modified to comply with latest Americans With Disabilities Act (A.D.A.) guidelines and similar State requirements. Architect or Contractor must submit plans to building and other local officials as necessary for compliance with all Federal, State and Local building codes, including A.D.A. guidelines, before commencing work. Notify Burkhart of any changes that would modify any dental treatment rooms and/or any dental cabinet layout.

The Contractor should furnish all electrical, plumbing, and structural requirements listed, as this is necessary before the dental equipment can be installed. Burkhart, will furnish the dental equipment. Check all measurements with the actual building dimensions, or Architect's plans. The specifications shown on this plan have not been checked for compliance with Federal, State or Local building codes and regulations.

Listed requirements show only the services, connections and fixtures required for the dental office equipment shown; and these drawings do not provide for the electrical, mechanical and structural requirements for the building or office as a whole.

See Mechanical and Electrical Sheets for further information.

THIS IS A SUGGESTED PLAN WITH SPECIFICATIONS FOR THE DENTAL EQUIPMENT ONLY.

DENALI COMMISSION ALASKA

DATE	REVISIONS	INIT.

ALASKA NATIVE TRIBAL HEALTH CONSORTIUM

DIVISION OF ENVIRONMENTAL HEALTH AND ENGINEERING
1901 SOUTH BRAGAW STREET, SUITE 200
ANCHORAGE, ALASKA, 99508-3440
(907) 729-3600

McGRATH SUB-REGIONAL HEALTH CENTER
DENTAL DETAILS

DATE: 4/20/2009
SCALE: AS NOTED
DRAWN BY: CFP
FILE NAME:
PROJECT NO: 0198
PROJ ARCH. BK

SHEET D-301

3 OF 4D

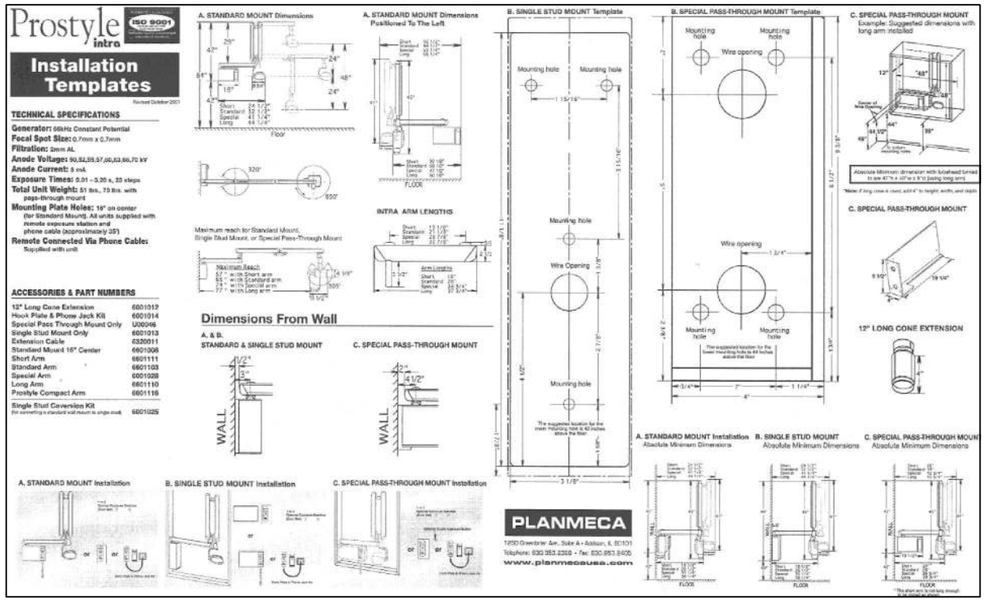

4 PLANMECA INTRAORAL X-RAY
NOT TO SCALE - SEE FULL SIZE TEMPLATES

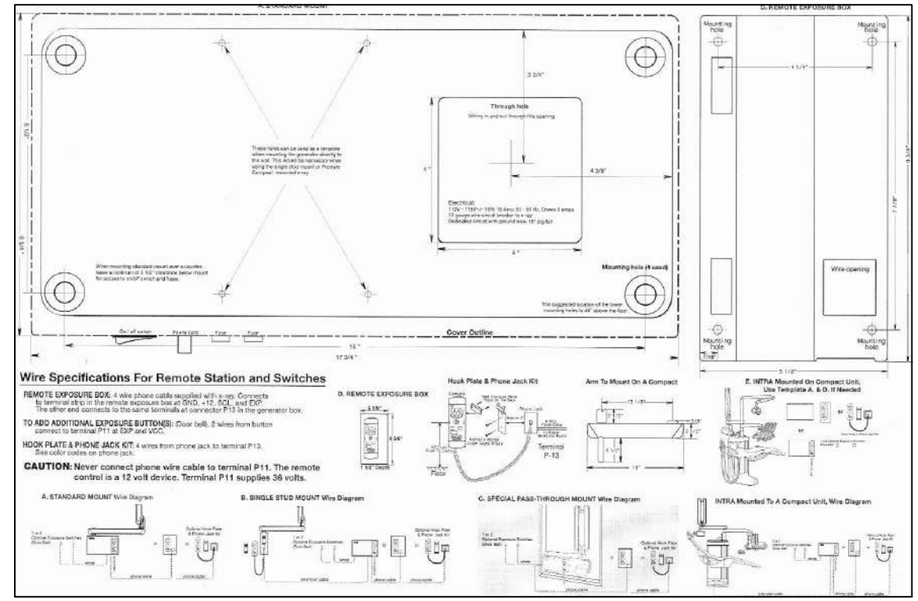

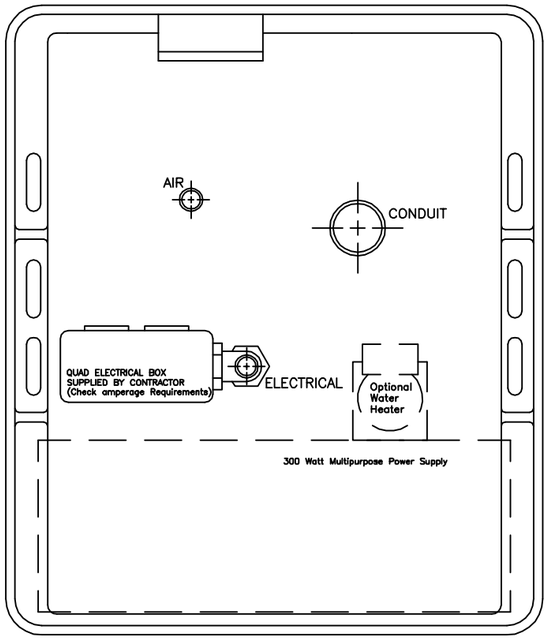

5 ADEC CONTOURED FLOOR BOX
NOT TO SCALE - SEE FULL SIZE TEMPLATE

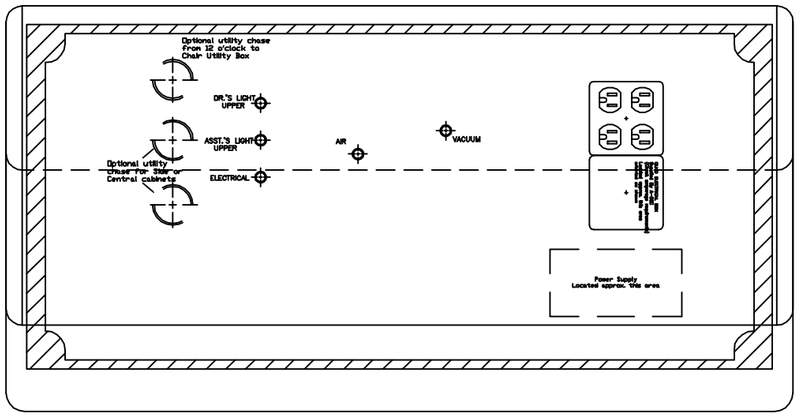

6 ADEC 5580 TREATMENT CONSOLE
NOT TO SCALE - SEE FULL SIZE TEMPLATE

DENTAL EQUIPMENT SPECIFIC TO THESE SPECIFICATIONS CAN BE AQUIRED FROM:

BURKHART
DENTAL SUPPLY COMPANY
2502 South 78th Street
Tacoma, Washington 98409
* * * * * * * * * * * * * *
12000 Industry Way, Unit N-1
Anchorage, Alaska 99515
Attn: Carter Barnes
Phone: 1-866-324-1983
Fax: 1-253-212-4981

DO NOT SCALE FROM THESE DRAWINGS. USE CALLED-OUT DIMENSIONS ONLY.

NOTE:

All framing, bracing, door sizes, floor levels, cabinet heights, rest room and lunch room facilities (if any) and other design details should be modified to comply with latest Americans With Disabilities Act (A.D.A.) guidelines and similar State requirements. Architect or Contractor must submit plans to building and other local officials as necessary for compliance with all Federal, State and Local building codes, including A.D.A. guidelines, before commencing work. Notify Burkhart of any changes that would modify any dental treatment rooms and/or any dental cabinet layout.

The Contractor should furnish all electrical, plumbing, and structural requirements listed, as this is necessary before the dental equipment can be installed. Burkhart, will furnish the dental equipment. Check all measurements with the actual building dimensions, or Architect's plans. The specifications shown on this plan have not been checked for compliance with Federal, State or Local building codes and regulations.

Listed requirements show only the services, connections and fixtures required for the dental office equipment shown; and these drawings do not provide for the electrical, mechanical and structural requirements for the building or office as a whole.

See Mechanical and Electrical Sheets for further information.

THIS IS A SUGGESTED PLAN WITH SPECIFICATIONS FOR THE DENTAL EQUIPMENT ONLY.

DENALI COMMISSION ALASKA

DATE	REVISIONS	INIT.

ALASKA NATIVE TRIBAL HEALTH CONSORTIUM

DIVISION OF ENVIRONMENTAL HEALTH AND ENGINEERING
1901 SOUTH BRAGAW STREET, SUITE 200
ANCHORAGE, ALASKA, 99508-3440
(907) 729-3600

McGRATH SUB-REGIONAL HEALTH CENTER
DENTAL DETAILS

DATE: 4/20/2009
SCALE: AS NOTED
DRAWN BY: CFP
FILE NAME:
PROJECT NO: 0198
PROJ ARCH: BK

SHEET D-401

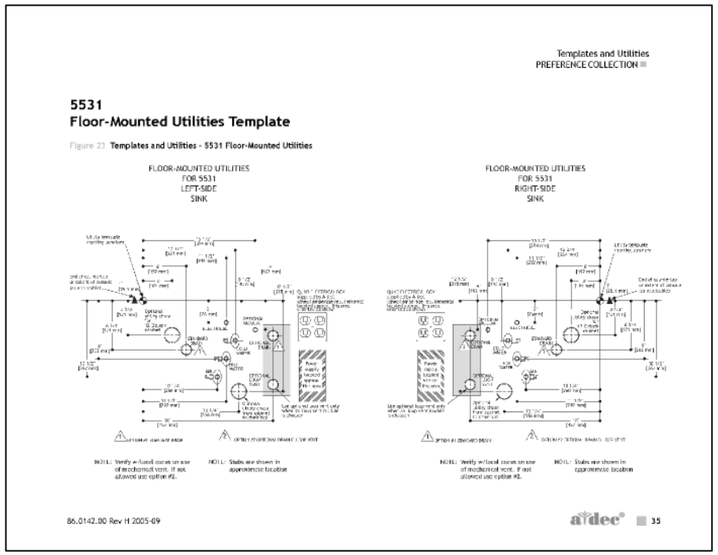

7 ADEC 5531 UTILITIES
NOT TO SCALE - SEE FULL SIZE TEMPLATE

8 WHALEDENT ULTRASONIC CLEANER
NOT TO SCALE - SEE FULL SIZE TEMPLATE

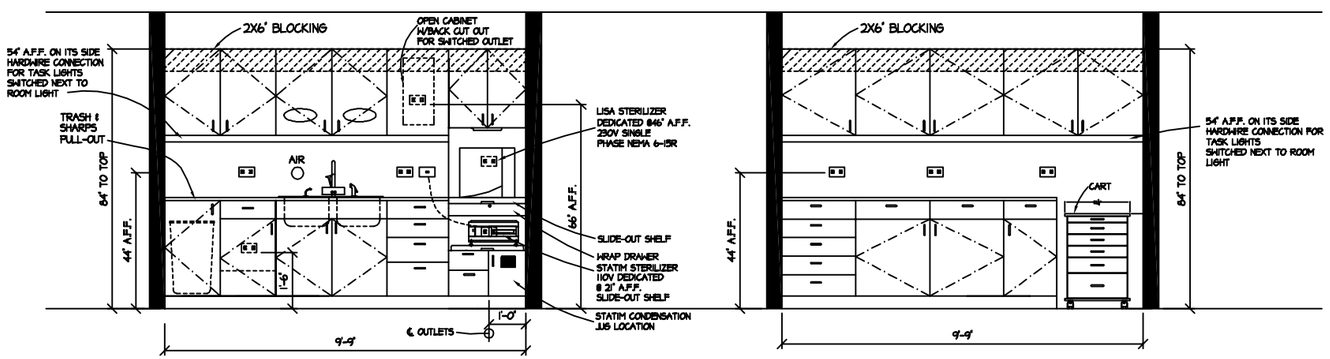

A DIRTY SIDE ROOM 118
Scale: 0'-0 1/2"=1'-0"

B CLEAN SIDE ROOM 118

DENTAL EQUIPMENT SPECIFIC TO THESE SPECIFICATIONS CAN BE AQUIRED FROM:

BURKHART
DENTAL SUPPLY COMPANY
2502 South 78th Street
Tacoma, Washington 98409
* * * * * * * * * * * * * *
12000 Industry Way, Unit N-1
Anchorage, Alaska 99515
Attn: Carter Barnes
Phone: 1-866-324-1983
Fax: 1-253-212-4981

DO NOT SCALE FROM THESE DRAWINGS.
USE CALLED-OUT DIMENSIONS ONLY.

NOTE:

All framing, bracing, door sizes, floor levels, cabinet heights, rest room and lunch room facilities (if any) and other design details should be modified to comply with latest Americans With Disabilities Act (A.D.A.) guidelines and similar State requirements. Architect or Contractor must submit plans to building and other local officials as necessary for compliance with all Federal, State and Local building codes, including A.D.A. guidelines, before commencing work. Notify Burkhart of any changes that would modify any dental treatment rooms and/or any dental cabinet layout.

The Contractor should furnish all electrical, plumbing, and structural requirements listed, as this is necessary before the dental equipment can be installed. Burkhart, will furnish the dental equipment. Check all measurements with the actual building dimensions, or Architect's plans. The specifications shown on this plan have not been checked for compliance with Federal, State or Local building codes and regulations.

Listed requirements show only the services, connections and fixtures required for the dental office equipment shown; and these drawings do not provide for the electrical, mechanical and structural requirements for the building or office as a whole.

See Mechanical and Electrical Sheets for further information.

THIS IS A SUGGESTED PLAN WITH SPECIFICATIONS FOR THE DENTAL EQUIPMENT ONLY.

DENALI COMMISSION ALASKA

DATE	REVISIONS	INIT.

ALASKA NATIVE TRIBAL HEALTH CONSORTIUM
DIVISION OF ENVIRONMENTAL HEALTH AND ENGINEERING
1901 SOUTH BRAGAW STREET, SUITE 200
ANCHORAGE, ALASKA, 99508-3440
(907) 729-3600

McGRATH SUB-REGIONAL HEALTH CENTER
DENTAL DETAILS

DATE: 4/20/2009
SCALE: AS NOTED
DRAWN BY: CFP
FILE NAME:
PROJECT NO: 0198
PROJ ARCH: BK

SHEET D-501

GENERAL STRUCTURAL NOTES AND SPECIFICATIONS

GENERAL
ALL MATERIALS AND CONSTRUCTION SHALL CONFORM TO REQUIREMENTS OF THE INTERNATIONAL CODE COUNCIL INTERNATIONAL BUILDING CODE (IBC) 2006 EDITION. WHERE EXPLICIT DETAILS ARE NOT SHOWN OR DESCRIBED, THE MINIMUM REQUIREMENTS OF THE ABOVE CODE SHALL APPLY. UNLESS OTHERWISE NOTED, ALL CODES, STANDARDS AND OTHER PUBLICATIONS CITED SHALL REFER TO THE LATEST EDITION.

LOCATION
THESE PLANS ARE FOR THE CONSTRUCTION OF THE MCGRATH SUBREGIONAL HEALTH CENTER IN MCGRATH, ALASKA.

DESIGN LOADS
IN ADDITION TO DEAD LOADS, THE FOLLOWING LIVE LOADS WERE USED FOR DESIGN:

ROOF: 60 P.S.F. (SNOW – 2 MONTH DURATION) PLUS DRIFTING
WIND: 100 MPH, EXPOSURE C
SEISMIC: Ss=0.373, S1=0.13, SITE CLASS D. SEISMIC DESIGN CATAGORY C

LATERAL LOADS ARE RESISTED BY WOOD SHEAR WALLS AND DIAPHRAGMS.

SITE WORK
PREPARATION OF A SAFE AND SUITABLE BUILDING SITE SHALL BE COMPLETED PRIOR TO CONSTRUCTION OF FOUNDATIONS AND SLABS. NO SITE INVESTIGATION OR SOILS BORINGS WERE PERFORMED BY THE ENGINEER. THE FOUNDATION DESIGN IS BASED ON THE "GEOTECHNICAL REPORT FOR THE PROPOSED MCGRATH HEALTH CENTER" PREPARED BY NORTHERN GEOTECHNICAL ENGINEERING FOR CRW ENGINEERING GROUP OF ANCHORAGE, ALASKA. IN THIS REPORT IT IS STATED THAT PERMAFROST IS PRESENT ON THE SITE, AND A DIAGRAM ROUGHLY DELINEATES THE EXTENT OF PERMANENTLY FROZEN SOILS. IN ORDER TO REDUCE THE POSSIBILITY OF DIFFERENTIAL SETTLEMENT, THE BUILDING HAS BEEN LOCATED ON A PORTION OF THE SITE THAT IS ASSUMED TO HAVE NO PERMAFROST PRESENT. A CONVENTIONAL STRIP FOOTING FOUNDATION SYSTEM HAS BEEN USED, WITH 3000 PSF BEARING CAPACITY AS RECOMMENDED IN THE GEOTECH REPORT. CONTACT OWNERS REPRESENTATIVE AND ENGINEER FOR DIRECTION IF PERMAFROST OR FROZEN SOILS ARE ENCOUNTERED WITHIN THE LIMITS OF THE BUILDING EXCAVATION.

FOUNDATIONS
EXCAVATE AND REMOVE ALL ORGANIC MATTER, DEBRIS AND FROST SUSCEPTIBLE SOILS FROM UNDER THE BUILDING FOOTPRINT AND TO 24" BEYOND THE BUILDING FOOTPRINT. PLACE ALL INTERIOR AND EXTERIOR FOOTINGS ON NATURAL UNDISTURBED, NON–FROST SUSCEPTIBLE (N.F.S.) SOIL OR ON COMPACTED NON–FROST SUSCEPTIBLE GRAVEL BACKFILL FREE OF ORGANIC MATTER AND DEBRIS, AND CONFORMING TO THE FOLLOWING GRADATION:

NON–FROST SUSCEPTIBLE GRAVEL BACKFILL

SIEVE:	PERCENT PASSING:
3"	100
1"	80 – 100
#4	30 – 70
#200	0 – 5

NO MORE THAN 3% OF PARTICLES BY WEIGHT SHALL BE FINER THAN 0.02 MM. BACKFILLSHALL BE PLACED IN LIFTS NOT EXCEEDING 12 INCHES IN LOOSE THICKNESS AND COMPACTED TO 95% OF MAXIMUM DENSITY IN ACCORDANCE WITH ASTM SPECIFICATION D–1557.

FOUNDATION INSULATION
NFOUNDATION INSULATION SHALL BE 'DOW HIGHLOAD 40' EXTRUDED POLYSTYRENE INSULATION, 'BLUEBOARD' OR 'INSULFOAM' HIGH DENSITY EXPANDED POLYSTYRENE. WITH 40 PSI MIMIMUM COMPRESSIVE STRENGTH.

SLABS ON GRADE
INTERIOR SLABS: PREPARE THE SITE BY REMOVING ALL ORGANIC SOILS AND DEBRIS. AFTER EXCAVATION, COMPACT THE EXISTING SOIL TO 95% OF MAXIMUM DENSITY AND BACKFILL WITH A MINIMUM OF 8" OF NON–FROST SUSCEPTIBLE GRAVEL AND COMPACT AS DESCRIBED ABOVE. PLACE REINFORCING STEEL AT MID–DEPTH OF SLAB AND SUPPORT AT 4'O/C MAXIMUM WITH WELL CURED CONCRETE BLOCKS OR APPROVED METAL CHAIRS. DO NOT SUPPORT ON STONES. PROVIDE PREFORMED CONTROL OR CONSTRUCTION JOINTS (C.J.) AT LOCATIONS SHOWN ON THE PLANS AND AT 20' O/C MAXIMUM.

EXTERIOR SLABS: PROVIDE A MINIMUM OF 72 INCHES OF NON–FROST SUSCEPTIBLE GRAVEL BELOW SLAB CONFORMING TO THE GRADATION AND COMPACTION REQUIREMENTS DESCRIBED ABOVE FOR FOUNDATIONS.

DRAINAGE: SLOPE ALL EXTERIOR SLABS ADJACENT TO BUILDINGS TO DRAIN AWAY FROM BUILDING PERIMETER AT 1/8" PER FOOT MINIMUM SLOPE.

CONCRETE
MIXING, SELECTION OF MATERIALS, AND PLACING OF ALL CONCRETE SHALL CONFORM TO THE REQUIREMENTS OF THE IBC, CHAPTER 19. AN AIR ENTRAINING AGENT SHALL BE USED IN ALL CONCRETE MIXES FOR CONCRETE WORK WHICH IS TO BE EXPOSED TO EARTH OR WEATHER.
AIR ENTRAINMENT SHALL BE 5% +/– 1% BY VOLUME. ALL CONCRETE SHALL HAVE A MINIMUM 28 DAY COMPRESSIVE STRENGTH (F'C) = 3000 P.S.I. EXCEPT CONCRETE GROUT FOR MASONRY WALLS WHICH SHALL HAVE A MINIMUM 28 DAY COMPRESSIVE STRENGTH (F'c)= 2000 P.S.I. CONCRETE FOR INTERIOR AND EXTERIOR SLABS SHALL CONTAIN 1.6 POUNDS OF 'FORTA FIBRE D15' COLLATED FIBRILLATED POLYPROPYLENE FIBER PER CUBIC YARD OF CONCRETE. THE FIBER SHALL BE THOROUGHLY MIXED INTO THE CONCRETE IN TRANSIT TO THE SITE, IN ACCORDANCE WITH THE FIBER MANUFACTURER'S RECOMMENDATIONS.

REINFORCING STEEL
UNLESS NOTED OTHERWISE, ALL REINFORCING STEEL SHALL BE DEFORMED BARS CONFORMING TO IBC CHAPTER 19. REINFORCING BARS SHALL BE GRADE 60. REINFORCING STEEL SHALL BE SECURELY TIED IN PLACE WITH #16 DOUBLE ANNEALED IRON WIRE. REINFORCING IN FOOTINGS SHALL BE SUPPORTED ON WELL CURED CONCRETE BLOCKING OR APPROVED METAL CHAIRS. REINFORCING BARS SHALL BE SPLICED BY A LAP OF AT LEAST 30 BAR DIAMETERS. A MINIMUM LAP FOR ALL BARS SHALL BE 24". CONCRETE COVER OVER REINFORCING SHALL BE 3" FOR CONCRETE CAST AGAINST EARTH. CONCRETE COVER FOR FORMED CONCRETE THAT WILL BE EXPOSED TO WEATHER OR EARTH SHALL BE 2" MINIMUM FOR #6 THROUGH #18 BARS AND 1 1/2" MINIMUM FOR #5 BARS AND SMALLER, INCLUDING WELDED WIRE FABRIC (WWF). OTHER REINFORCEMENT SHALL HAVE A MINIMUM COVERAGE OF NOT LESS THAN 3/4".

ANCHOR BOLTS AND CONCRETE EXPANSION ANCHORS
ANCHOR BOLTS, THREADED RODS AND CONCRETE EXPANSION ANCHORS SHALL CONFORM TO ASTM A 307. CONCRETE EXPANSION ANCHORS (KB) SHALL BE "HILTI KWIK BOLT II" CONCRETE EXPANSION ANCHORS OR STRUCTURAL EQUIVALENT, INSTALLED IN ACCORDANCE WITH MANUFACTURER'S RECOMMENDATIONS. ANCHOR BOLTS SHALL BE PROVIDES WITH HEX HEAD NUTS AND 2"x2"x¼" STEEL PLATE WASHERS. WHERE BOLTS OR RODS ARE USED WITH CEDAR SILL PLATES, BOLTS, NUTS AND WASHERS SHALL BE GALVANIZED. ALL FASTENERS IN CONTACT WITH PRESSURE TREATED WOOD SHALL BE HOT DIPPED GALVANIZED OR SHALL BE STAINLESS STEEL. PROVIDE ⅝" X 10" ANCHOR BOLTS AT 48" O/C SPACING UNLESS NOTED OTHERWISE AND WITHIN 6" OF WALL OPENINGS AND BUILDING CORNERS.

POWER FASTENERS
POWER FASTENERS FOR CONNECTION TO CONCRETE, GROUTED MASONRY, OR STEEL SHALL BE POWDER ACTUATED HILTI X–AL–H HEAVY DUTY DOME HEAD NAILS WITH 0.177 INCH SHANK DIAMETER. MINIMUM FASTENER EMBEDMENT SHALL BE 1 3/8". NAIL LENGTH SHALL BE AS REQUIRED TO ACHIEVE SPECIFIED MINIMUM PENETRATION INTO SUBSTRATE.

ADHESIVE ANCHORING SYSTEM
THREADED ROD ANCHORS AND REINFORCING BAR DOWELS SHALL BE SET IN SIMPSON ACRYLIC TIE ADHESIVE OR STRUCTURAL EQUIVALENT. ADHESIVE ANCHORS SHALL BE INSTALLED IN ACCORDANCE WITH THE ADHESIVE MANUFACTURER'S RECOMMENDED INSTALLATION PROCEDURES. MINIMUM EMBEDMENT IN CONCRETE FOR ALL ANCHORS SHALL BE 31/2" UNLESS NOTED OTHERWISE.

SAWN LUMBER AND TIMBER
LUMBER SHALL CONFORM TO THE CLASSIFICATION, DEFINITION, AND GRADING REQUIREMENTS OF IBC CHAPTER 23 WITH ALLOWABLE UNIT STRESSES AS GIVEN IN THE AMERICAN FOREST & PAPER ASSOCIATION 'NATIONAL DESIGN SPECIFICATION 2001 SUPPLEMENT', TABLE 4A. LUMBER SHALL BE GRADE MARKED BY THE WEST COAST LUMBER INSPECTION BUREAU /WESTERN WOOD PRODUCTS ASSOCIATION.

ITEM	SPECIES
4 X AND LARGER	DOUGLAS FIR #2
BEARING WALL PLATES	HEM FIR #2
BEARING WALL STUDS	HEM FIR #2
ALL OTHER LUMBER	HEM FIR #2

ALL LUMBER SHALL BE FASTENED IN CONFORMANCE WITH TABLE 2304.9.1 OF THE IBC, UNLESS NOTED OTHERWISE. FASTENERS SHALL BE GALVANIZED UNLESS OTHERWISE NOTED. FASTEN ALL JOIST BLOCKING TO PLATES WITH (4) 16D MINIMUM AND FASTEN ALL WALL PLATES TO WOOD FLOORS WITH 16D AT 6" ON CENTER TYPICAL. DOUBLE TOP PLATES SHALL OVERLAP 10' – 0" MINIMUM AND SHALL BE SPLICED TOGETHER WITH 16D NAILS AT 6" ON CENTER MINIMUM UNLESS NOTED OTHERWISE.

PROVIDE JOIST/BEAM HANGERS WITH LOAD CAPACITY EQUAL TO SUPPORTED MEMBER SHEAR LOAD CAPACITY FOR ALL MEMBERS NOT OTHERWISE PROVIDED WITH DIRECT BEARING SUPPORT. PROVIDE A MINIMUM OF (2) KING STUDS AND (2) CRIPPLE STUDS FOR ALL BEARING WALL HEADERS. PROVIDE A MINIMUM OF (1)KING STUD AND (1) CRIPPLE STUD AT NON–BEARING WALL HEADERS. PROVIDE SOLID BLOCKING SUPPORT FOR BEAMS AND HEADERS CONTINUOUS DOWN TO FOUNDATIONS. MINIMUM HEADER OVER OPENINGS IN BEARING WALLS SHALL BE 4X12 DF#1 UNLESS NOTED OTHERWISE.

BOLT HEADS AND NUTS BEARING AGAINST WOOD TO BE PROVIDED WITH FLAT WASHERS. SOLID BLOCKING OF NOT LESS THAN 2" NOMINAL THICKNESS SHALL BE PROVIDED AT ENDS AND AT ALL SUPPORTS OF JOISTS AND RAFTERS, UNLESS SHOWN OTHERWISE. BEAM AND JOIST HANGERS SHALL HAVE A CAPACITY EQUAL TO THE SHEAR STRENGTH OF THE BEAM OR JOIST WHICH IT IS SUPPORTING, UNLESS NOTED OTHERWISE. ALL METAL FRAMING ANCHORS AND HANGERS SHOWN ON DRAWINGS SHALL BE "STRONG TIE CONNECTORS" AS MANUFACTURED BY SIMPSON COMPANY OR APPROVED EQUAL. ALL SIMPSON CONNECTORS IN CONTACT WITH PRESSURE TREATED WOOD SHALL BE TYPE 304 OR TPYE 316 STAINLESS STEEL.

PRESSURE TREATED WOOD
ALL WOOD INDICATED AS PRESSURE TREATED, (PT) SHALL BE PRESSURE TREATED (PT) IN ACCORDANCE THE AMERICAN WOOD PRESERVER'S ASSOCIATION STANDARD U1–02. THE PRESERVATIVE SHALL BE ALKALINE COPPER QUAT (ACQ). ALL WOOD SHLL BE TREATED TO A RETENTION OF 0.60 PCF AS REQUIRED FOR 'GROUND CONTACT' ALL PRESSURE TREATED WOOD SHALL BE APPROPRIATELY MARKED ATTESTING TO COMPLIANCE WITH THESE REQUIREMENTS. LUMBER SHALL BE DRIED AFTER TREATMENT TO A MOISTURE CONTENT OF 19% OR LESS. **ALL BOLTS, NAILS AND SIMPSON CONNECTORS IN CONTACT WITH PRESSURE TREATED WOOD SHALL BE TYPE 304 OR TYPE 316 STAINLESS STEEL.**

GLUED LAMINATED STRUCTURAL UNITS
MATERIALS, MANUFACTURE, AND QUALITY CONTROL OF GLUED LAMINATED STRUCTURAL UNITS (GLULAM) SHALL CONFORM TO IBC CHAPTER 23 WITH ALLOWABLE STRESSES AS DEFINED IN AMERICAN FOREST & PAPER ASSOCIATION 'NATIONAL DESIGN SPECIFICATION 2001 SUPPLEMENT', TABLE 5A, AND SHALL BE DOUGLAS FIR, COMBINATION 24F–V8, DF/DF. GLUE LAMINATED STRUCTURAL UNITS SHALL BE GRADE MARKED BY THE AMERICAN INSTITUTE OF TIMBER CONSTRUCTION, AITC.

WOOD TRUSSES
WOOD TRUSSES SHALL BE DESIGNED FABRICATED AND INSTALLED IN ACCORDANCE WITH THE TRUSS PLATE INSTITUTE'S DESIGN SPECIFICATION FOR METAL PLATE CONNECTED WOOD TRUSSES (TPI–78). TRUSS PROFILES SHALL BE AS SHOWN ON THE DRAWINGS. INSTALL AND BRACE TRUSSES IN ACCORDANCE WITH MANUFACTURERS RECOMMENDATIONS. TRUSS SHOP
DRAWINGS SHALL BE PROVIDED BY THE TRUSS SUPPLIER AND SHALL BEAR THE SEAL OF A PROFESSIONAL ENGINEER LICENSED TO PRACTICE CIVIL ENGINEERING IN THE STATE OF ALASKA.

PLYWOOD
ALL PLYWOOD SHALL CONFORM TO UBC STANDARD 23–2 AND SHALL BE AMERICAN PLYWOOD ASSOCIATION GRADE TRADE MARKED. PLYWOOD SHALL BE GROUP I OR GROUP II DOUGLAS FIR. ALL PANELS SHALL BE NOMINAL 4' X 8' PANELS. UTILIZE FULL SHEETS WHEREVER POSSIBLE. LAY FACE GRAIN OF ROOF AND FLOOR SHEATHING PANELS PERPENDICULAR TO JOISTS AND WITH PANEL CONTINUOUS OVER THREE OR MORE SPANS. STAGGER END JOINTS OF SUCCESSIVE COURSES 4' – 0". WALL SHEATHING SHALL BE INSTALLED WITH THE FACE GRAIN PARALLEL TO STUDS, (LONG DIMENSION VERTICAL).

ROOF SHEATHING: SHALL BE 5/8" THICK GRADE APA 40/20 SPAN RATED PLYWOOD WITH EXTERIOR GLUE. ROOF SHEATHING SHALL BE FASTENED TO END SUPPORTS WITH 10D GALVANIZED NAILS AT 6" O/C. AT BLOCKED DIAPHRAGM LOCATIONS, FASTEN PLYWOOD TO FRAMING AT ALL PANEL EDGES WITH 10D GALVANIZED NAILS @ 4" O/C. AT ALL LOCATIONS, FASTEN PLYWOOD TO INTERMEDIATE SUPPORTS WITH 10D GALVANIZED NAILS AT 12 INCHES ON CENTER. PROVIDE 2X4 BLOCKING ALONG ALL PANEL EDGES WHERE SHOWN ON THE DRAWINGS. FASTEN ROOF SHEATHING TO BLOCKING OVER EXTERIOR WALLS WITH 10D GALVANIZED NAILS AT 4" O/C.

ORIENTED STRAND BOARD (OSB)
ALL ORIENTED STRAND BOARD SHALL CONFORM TO UBC STANDARD 23–3 AND SHALL BE AMERICAN PLYWOOD ASSOCIATION GRADE TRADE MARKED. ALL PANELS SHALL BE NOMINAL 4' X 8' PANELS. UTILIZE FULL SHEETS WHEREVER POSSIBLE. LAY STRENGTH AXIS OF ROOF AND FLOOR SHEATHING PANELS PERPENDICULAR TO SUPPORTS AND WITH PANEL CONTINUOUS OVER THREE OR MORE SPANS. STAGGER END JOINTS OF SUCCESSIVE COURSES 4'.

OSB WALL SHEATHING: SHALL BE 7/16" PANELS WITH EXTERIOR GLUE. UNLESS NOTED OTHERWISE ON THE DRAWINGS, WALL SHEATHING SHALL BE FASTENED TO FRAMING WITH 8D GALVANIZED NAILS 3" O/C ALONG PANEL EDGES AND 12" O/C ALONG INTERMEDIATE SUPPORTS. WALL SHEATHING SHALL BE BLOCKED AT ALL EDGES WITH NOMINAL 2" SOLID BLOCKING.

MANUFACTURED WOOD JOISTS
FABRICATED WOOD JOISTS SHALL BE OF THE SIZE INDICATED ON THE DRAWINGS AND AS MANUFACTURED BY BOISE CASCADE OR APPROVED EQUAL. FOLLOW MANUFACTURER'S RECOMMENDATIONS FOR INSTALLATION, HANDLING AND ERECTION OF FLOOR JOISTS. PROVIDE WEB STIFFENERS PER MANUFACTURER'S RECOMMENDATIONS AND ON BOTH SIDES OF WEBS WHERE JOISTS ARE SUPPORTED BY JOIST HANGERS. PROVIDE BLOCKING PANELS AT SUPPORTS AND ENDS OF JOISTS. PROVIDE FULL THICKNESS BACKER PLATE BETWEEN DOUBLE JOISTS WHERE JOIST IS FRAMED PERPENDICULAR INTO A DOUBLE JOIST. PROVIDE SOLID RIM JOISTS AROUND FULL PERIMETER OF FLOOR SYSTEM. UNLESS NOTED OTHERWISE ON THE DRAWINGS, PROVIDE LAMINATED VENEER LUMBER HEADERS, WITH DEPTH EQUAL TO JOIST DEPTH, AT ALL OPENINGS IN FLOOR AND ROOF SYSTEMS. UNLESS NOTED OTHERWISE, PROVIDE FACE MOUNT JOIST HANGERS WITH CAPACITY EQUAL TO THE FULL SHEAR CAPACITY OF THE JOIST AT ALL JOISTS WHERE JOIST IS NOT SUPPORTED BY DIRECT BEARING.

STRUCTURAL STEEL AND CONNECTORS
STRUCTURAL STEEL SHALL CONFORM TO UBC CHAPTER22, FOR ASTM SPECIFICATION A–36, FY = 36 K.S.I. EXCEPT WHERE NOTED OTHERWISE. STEEL TUBING (TS) SHALL CONFORM TO ASTM A500, GRADE B, FY = 46 K.S.I. DESIGN, FABRICATION AND ERECTION SHALL BE IN ACCORDANCE WITH THE IBC CHAPTER 22, DIVISION IX, ALLOWABLE STRESS DESIGN. MACHINE BOLTS (MB) SHALL CONFORM TO ASTM 307 AND SHALL BE PROVIDED WITH STANDARD HEX HEAD NUTS CONFORMING TO ASTM A563, GRADE A AND HARDENED STEEL CIRCULAR WASHERS CONFORMING TO ASTM F436. ALL WELDING SHALL CONFORM TO AMERICAN WELDING SOCIETY D1.1. WELD ALL FAYING SUREFACES WITH CONTINUOUS 3/16" FILLET WELD (MINIMUM) UNLESS OTHERWISE NOTED. ELECTRODES SHALL BE A.W.S. E–70. ANCHOR ALL COLUMNS WITH MINIMUM (4) 3/4" X 10" ANCHOR BOLTS UNLESS SHOWN OTHERWISE. PROVIDE ADEQUATE LATERAL BRACING FOR STRUCTURE DURING CONSTRUCTION.

SPECIAL INSPECTION
OWNER SHALL PROVIDE A SPECIAL INSPECTION PROGRAM IN ACCORDANCE WITH IBC CHAPTER 17. SPECIAL INSPECTIONS SHALL INCLUDE:
STEEL
1. PERIODIC INSPECTION OF FILLET WELDS SINGLE PASS FILLET WELDS NOT EXCEEDING 5/16 INCH IN SIZE.
2. PERIODIC INSPECTION OF FLOOR AND ROOF DECK WELDING.
3. VISUAL INSPECTION OF ALL WELDS PRIOR TO COMPLETION.

CONCRETE
1. INSPECTION OF REINFORCING STEEL AND PLACEMENT, PRIOR TO POURING CONCRETE.
2. SUBMITTAL OF CONCRETE MIX DESIGN TO VERIFY CONFORMANCE TO SPECIFICATIONS.
3. TESTING OF CONCRETE MATERIALS FOR CONCRETE USED IN THE CONSTRUCTION OF THE UNDERGROUND WATER STORAGE TANK WALLS AND LID. PROVIDE CONCRETE TEMPERATURE, SLUMP, ENTRAINED AIR CONTENT AND COMPRESSIVE STRENGTH TESTS FOR EACH TRUCKLOAD BATCH OF CONCRETE.

DATE	REVISIONS	INIT.

STATE OF ALASKA 49TH
William J. Nelson
CE - 5460
4/20/09
Registered Professional Engineer

ALASKA NATIVE TRIBAL HEALTH CONSORTIUM
DIVISION OF ENVIRONMENTAL HEALTH AND ENGINEERING
1901 SOUTH BRAGAW STREET, SUITE 200
ANCHORAGE, ALASKA, 99508–3440
(907) 729–3600

ALASKA NATIVE TRIBAL HEALTH CONSORTIUM

McGRATH SUB–REGIONAL HEALTH CENTER
GENERAL STRUCTURAL NOTES

DATE: 4/20/2009
SCALE: AS NOTED
DRAWN BY: MJD

FILE NAME:
PROJECT NO: 0198
PROJ ARCH: BK

SHEET
S–1.0

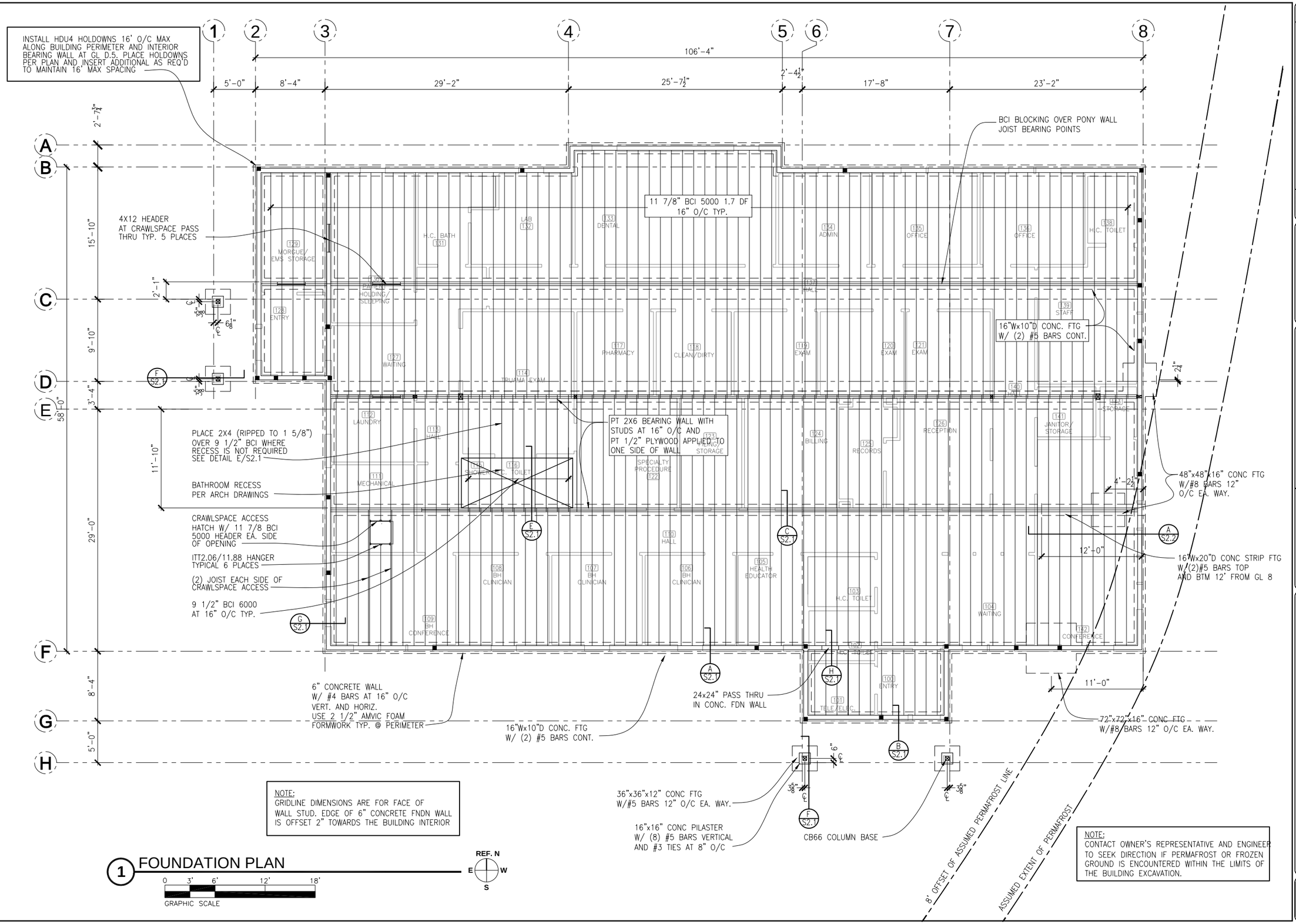

NOTE:
GRIDLINE DIMENSIONS ARE FOR FACE OF WALL STUD. EDGE OF 6" CONCRETE FNDN WALL IS OFFSET 2" TOWARDS THE BUILDING INTERIOR

NOTE:
CONTACT OWNER'S REPRESENTATIVE AND ENGINEER TO SEEK DIRECTION IF PERMAFROST OR FROZEN GROUND IS ENCOUNTERED WITHIN THE LIMITS OF THE BUILDING EXCAVATION.

1 FOUNDATION PLAN

INIT.	REVISIONS	DATE

STATE OF ALASKA 49TH William J. Nelson CE-5460 4/20/09 Registered Professional Engineer

ALASKA NATIVE TRIBAL HEALTH CONSORTIUM

DIVISION OF ENVIRONMENTAL HEALTH AND ENGINEERING
1901 SOUTH BRAGAW STREET, SUITE 200
ANCHORAGE, ALASKA, 99508-3440
(907) 729-3600

ALASKA NATIVE TRIBAL HEALTH CONSORTIUM

McGRATH SUB-REGIONAL HEALTH CENTER
FOUNDATION PLAN

FILE NAME:
PROJECT NO: 0198
PROJ ARCH. BK

DATE: 4/20/2009
SCALE: AS NOTED
DRAWN BY: MJD

SHEET S-2.0

2 OF 8

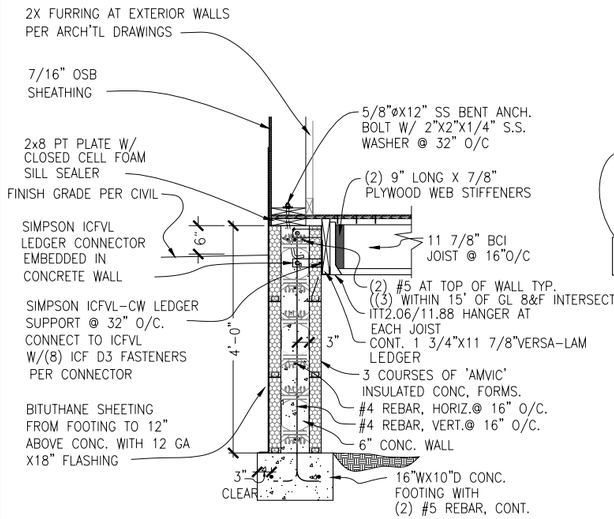

A S2.1 TYP. FOOTING DETAIL

0 6" 1' 2' 4'
GRAPHIC SCALE

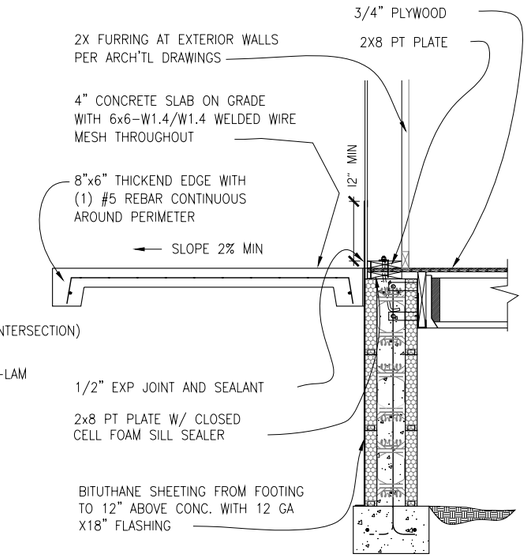

REFER TO A/S2.1 FOR ADDITIONAL NOTES

B S2.1 TYPICAL FOOTING DETAIL AT EXTERIOR SLAB

0 6" 1' 2' 4'
GRAPHIC SCALE

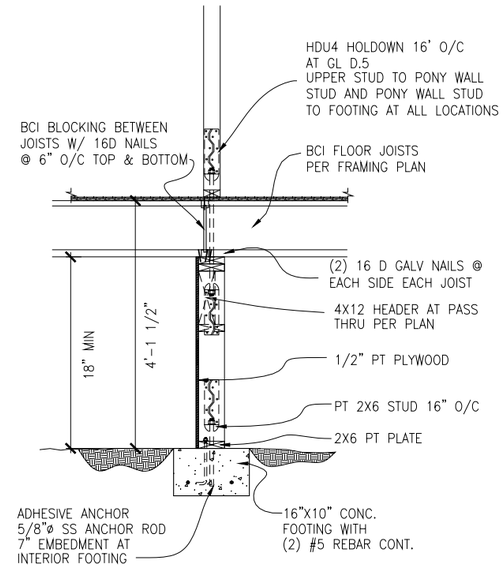

C S2.1 TYP. INTERIOR FTG. DETAIL

0 6" 1' 2' 4'
GRAPHIC SCALE

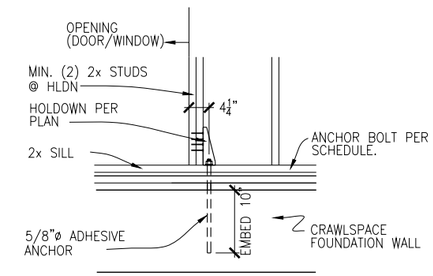

D S2.1 TYPICAL HOLDOWN DETAIL

0 6" 1' 2' 4'
GRAPHIC SCALE

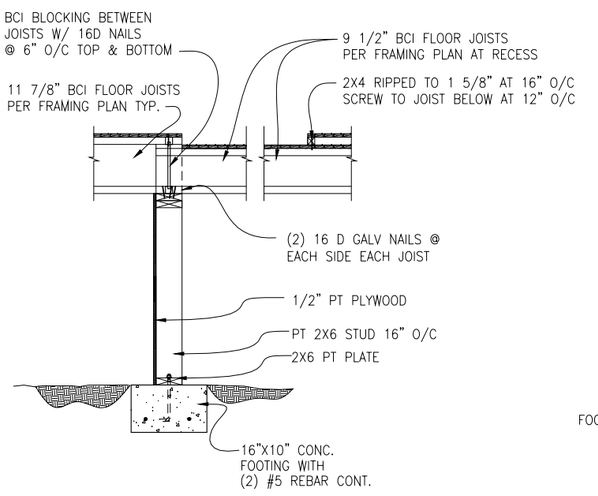

E S2.1 TYP. FLOOR RECESS DETAIL

0 6" 1' 2' 4'
GRAPHIC SCALE

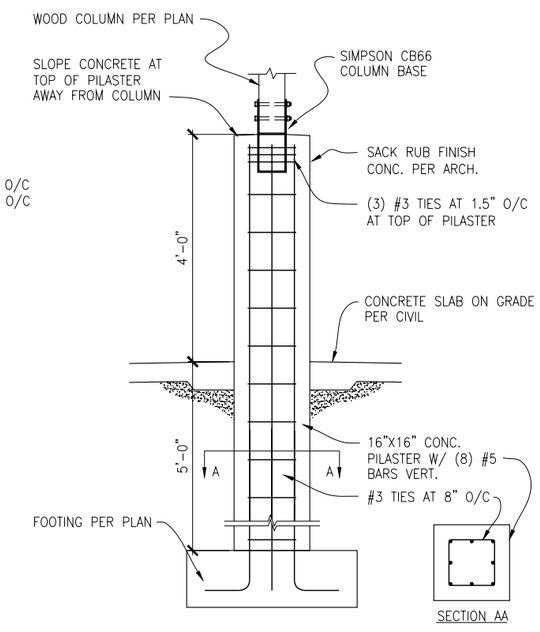

F S2.1 TYPICAL PILASTER

0 6" 1' 2' 4'
GRAPHIC SCALE

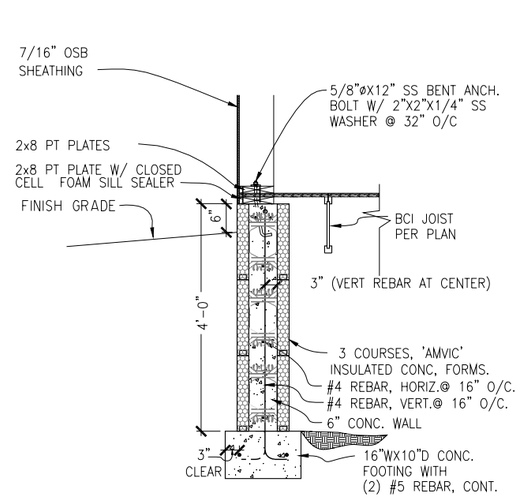

G S2.1 TYPICAL FOUNDATION WALL PARALLEL WITH JOIST

0 6" 1' 2' 4'
GRAPHIC SCALE

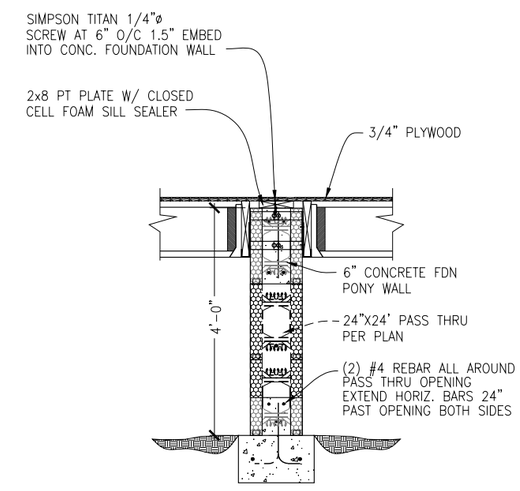

REFER TO A/S2.1 FOR ADDITIONAL NOTES

H S2.1 FOUNDATION WALL NEAR ENTRY BUMPOUT

0 6" 1' 2' 4'
GRAPHIC SCALE

INIT.	REVISIONS	DATE

STATE OF ALASKA 49TH William J. Nelson CE-5460 4/20/09 Registered Professional Engineer

ALASKA NATIVE TRIBAL HEALTH CONSORTIUM

DIVISION OF ENVIRONMENTAL HEALTH AND ENGINEERING
1901 SOUTH BRAGAW STREET, SUITE 200
ANCHORAGE, ALASKA, 99508-3440
(907) 729-3600

McGRATH SUB-REGIONAL HEALTH CENTER
FOUNDATION DETAILS

DATE: 4/20/2009
SCALE: AS NOTED
DRAWN BY: MJD

FILE NAME:
PROJECT NO: 0198
PROJ ARCH: BK

SHEET S-2.1

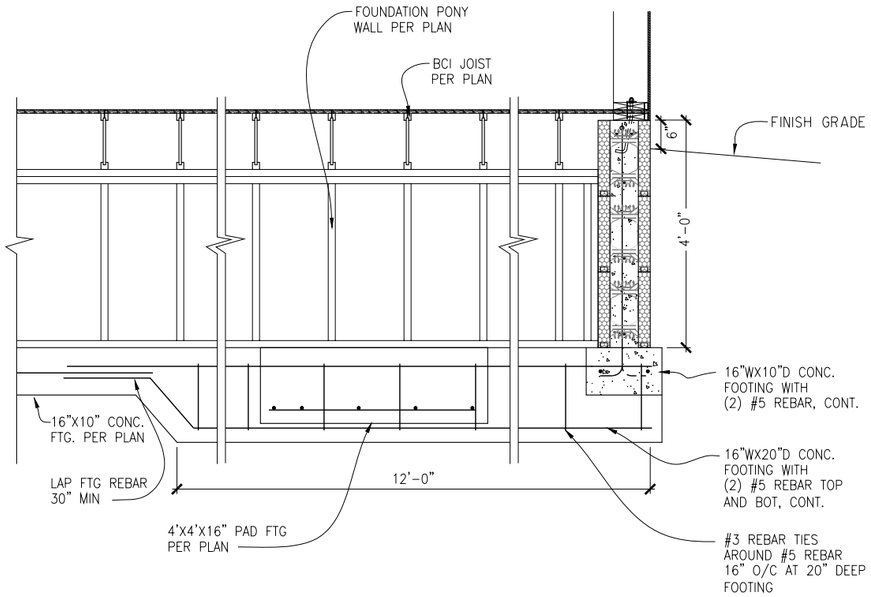

A
S2.2
FOOTING DETAIL NEAR GL E.5-8

0 6" 1' 2' 4'
GRAPHIC SCALE

DATE	REVISIONS	INIT.

STATE OF ALASKA 49TH
William J. Nelson
CE - 5460
4/20/09
Registered Professional Engineer

ALASKA NATIVE TRIBAL HEALTH CONSORTIUM

DIVISION OF ENVIRONMENTAL HEALTH AND ENGINEERING
1901 SOUTH BRAGAW STREET, SUITE 200
ANCHORAGE, ALASKA, 99508-3440
(907) 729-3600

ALASKA NATIVE • TRIBAL HEALTH CONSORTIUM

McGRATH SUB-REGIONAL HEALTH CENTER
FOUNDATION DETAILS

DATE: 4/20/2009
SCALE: AS NOTED
DRAWN BY: MJD

FILE NAME:
PROJECT NO: 0198
PROJ ARCH: BK

SHEET
S-2.2

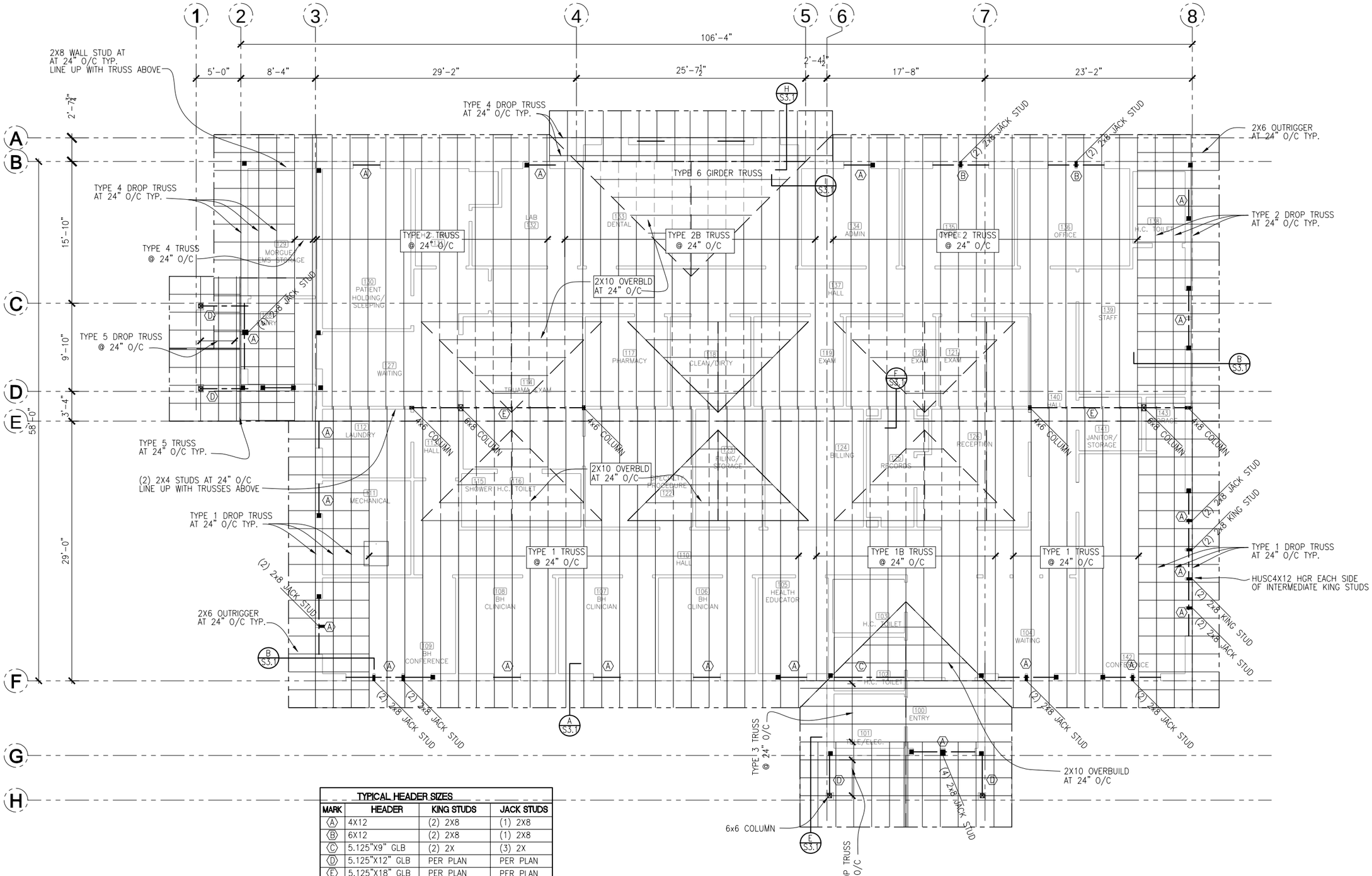

TYPICAL HEADER SIZES			
MARK	HEADER	KING STUDS	JACK STUDS
A	4X12	(2) 2X8	(1) 2X8
B	6X12	(2) 2X8	(1) 2X8
C	5.125"X9" GLB	(2) 2X	(3) 2X
D	5.125"X12" GLB	PER PLAN	PER PLAN
E	5.125"X18" GLB	PER PLAN	PER PLAN

1 ROOF FRAMING PLAN

REF. N
E W
S

0 3' 6' 12' 18'
GRAPHIC SCALE

INIT.	REVISIONS	DATE

STATE OF ALASKA 49TH William J. Nelson CE-5460 4/20/09 Registered Professional Engineer

ALASKA NATIVE TRIBAL HEALTH CONSORTIUM

DIVISION OF ENVIRONMENTAL HEALTH AND ENGINEERING
1901 SOUTH BRAGAW STREET, SUITE 200
ANCHORAGE, ALASKA, 99508-3440
(907) 729-3600

ALASKA NATIVE TRIBAL HEALTH CONSORTIUM

McGRATH SUB-REGIONAL HEALTH CENTER
ROOF FRAMING PLAN

FILE NAME:
PROJECT NO: 0198
PROJ ARCH.: BK

DATE: 4/20/2009
SCALE: AS NOTED
DRAWN BY: MJD

SHEET S-3.0

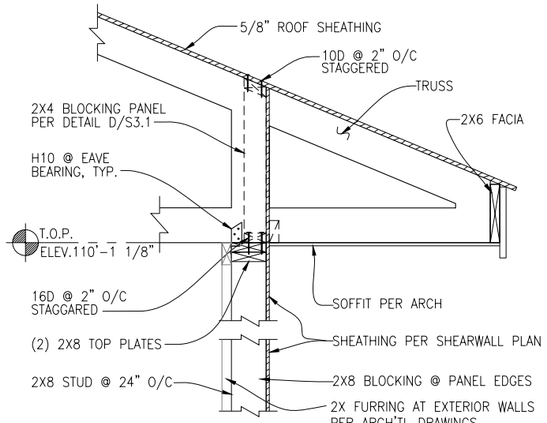

A S3.1 TRUSS @ EXTERIOR BEARING WALL, TYP.

0 6" 1' 2' 3'
GRAPHIC SCALE

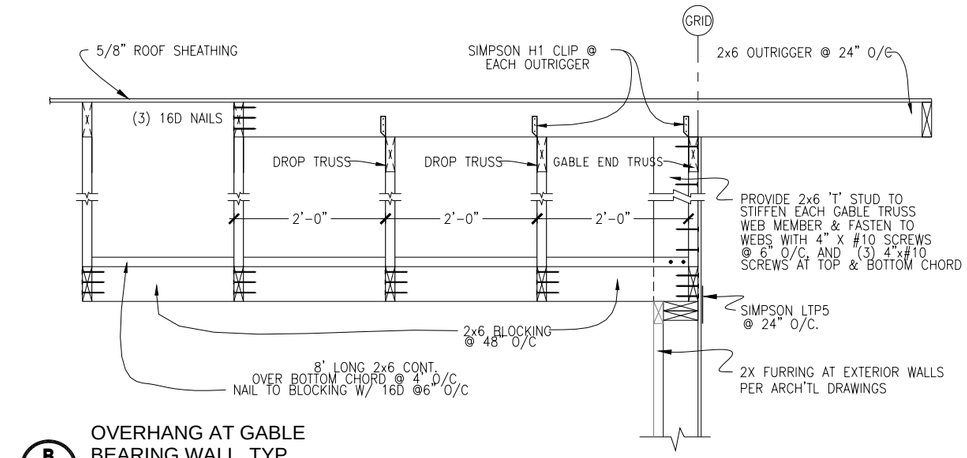

B S3.1 OVERHANG AT GABLE BEARING WALL, TYP.

0 6" 1' 2' 3'
GRAPHIC SCALE

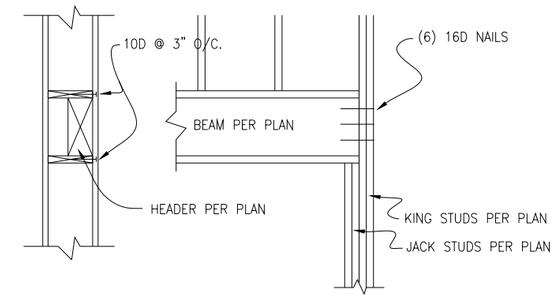

C S3.1 TYPICAL HEADER FRAMING

0 6" 1' 2' 3'
GRAPHIC SCALE

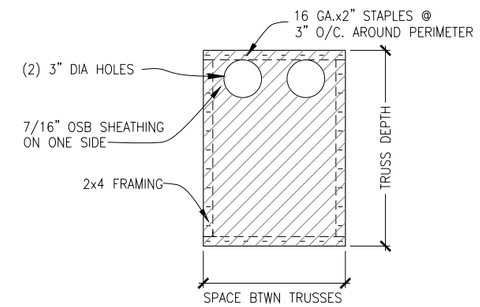

D S3.1 TYPICAL BLOCKING PANEL

0 6" 1' 2' 3'
GRAPHIC SCALE

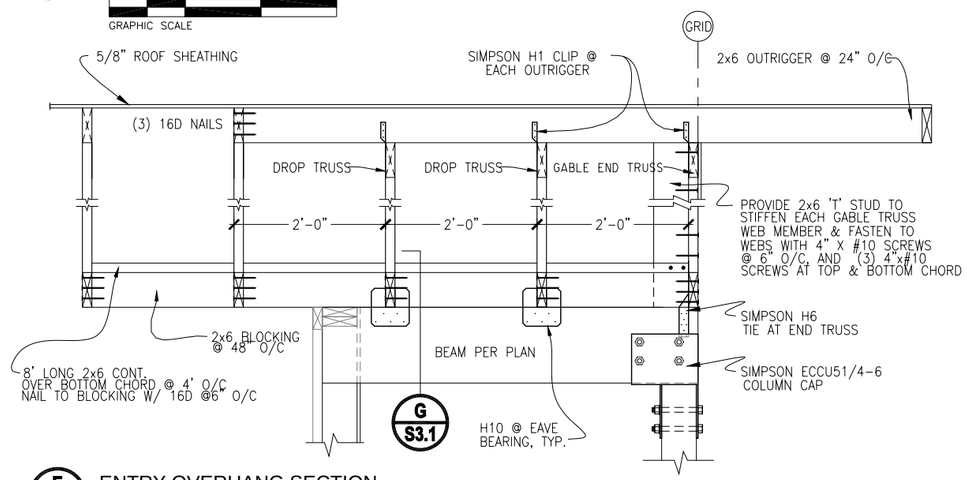

E S3.1 ENTRY OVERHANG SECTION

0 6" 1' 2' 3'
GRAPHIC SCALE

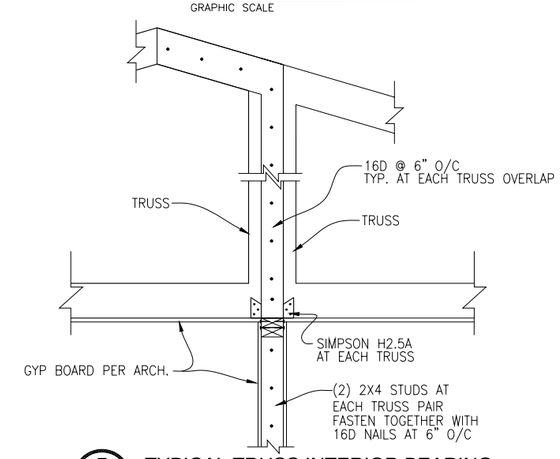

F S3.1 TYPICAL TRUSS INTERIOR BEARING

0 6" 1' 2' 3'
GRAPHIC SCALE

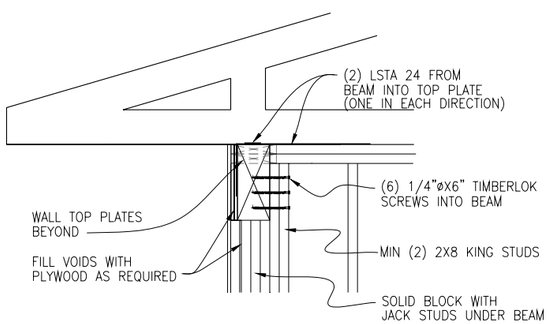

G S3.1 BEAM POCKET AT ENTRY

0 6" 1' 2' 3'
GRAPHIC SCALE

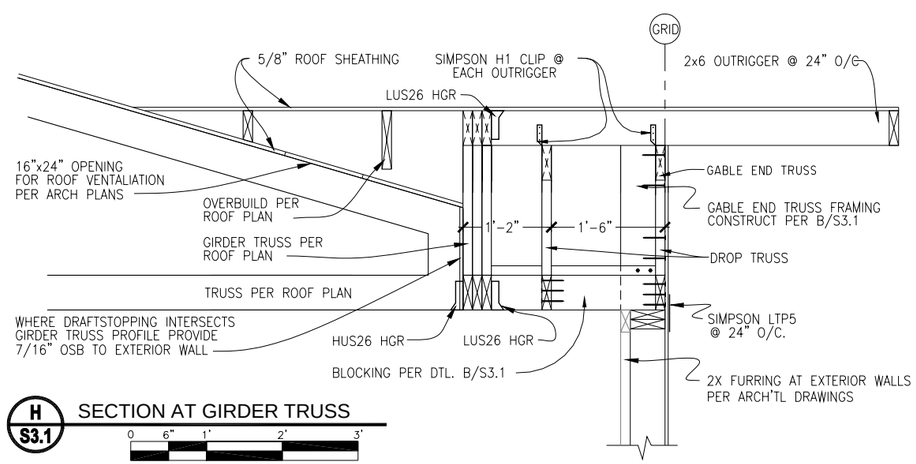

H S3.1 SECTION AT GIRDER TRUSS

0 6" 1' 2' 3'
GRAPHIC SCALE

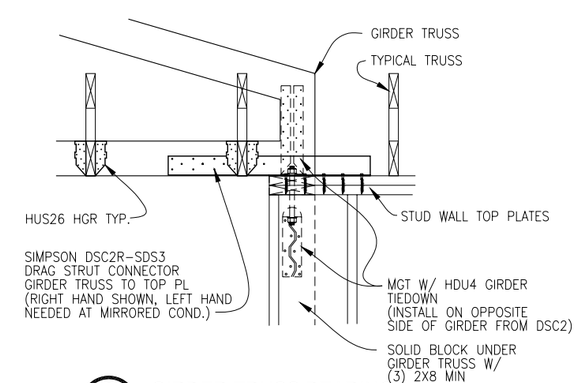

I S3.1 GIRDER TRUSS BEARING

0 6" 1' 2' 3'
GRAPHIC SCALE

INIT.	REVISIONS	DATE

STATE OF ALASKA 49TH William J. Nelson CE-5460 4/20/09 Registered Professional Engineer

ALASKA NATIVE TRIBAL HEALTH CONSORTIUM

DIVISION OF ENVIRONMENTAL HEALTH AND ENGINEERING
1901 SOUTH BRAGAW STREET, SUITE 200
ANCHORAGE, ALASKA, 99508-3440
(907) 729-3600

McGRATH SUB-REGIONAL HEALTH CENTER
ROOF DETAILS

FILE NAME:
PROJECT NO: 0198
PROJ ARCH: BK

DATE: 4/20/2009
SCALE: AS NOTED
DRAWN BY: MJD

SHEET S-3.1

6 OF 8

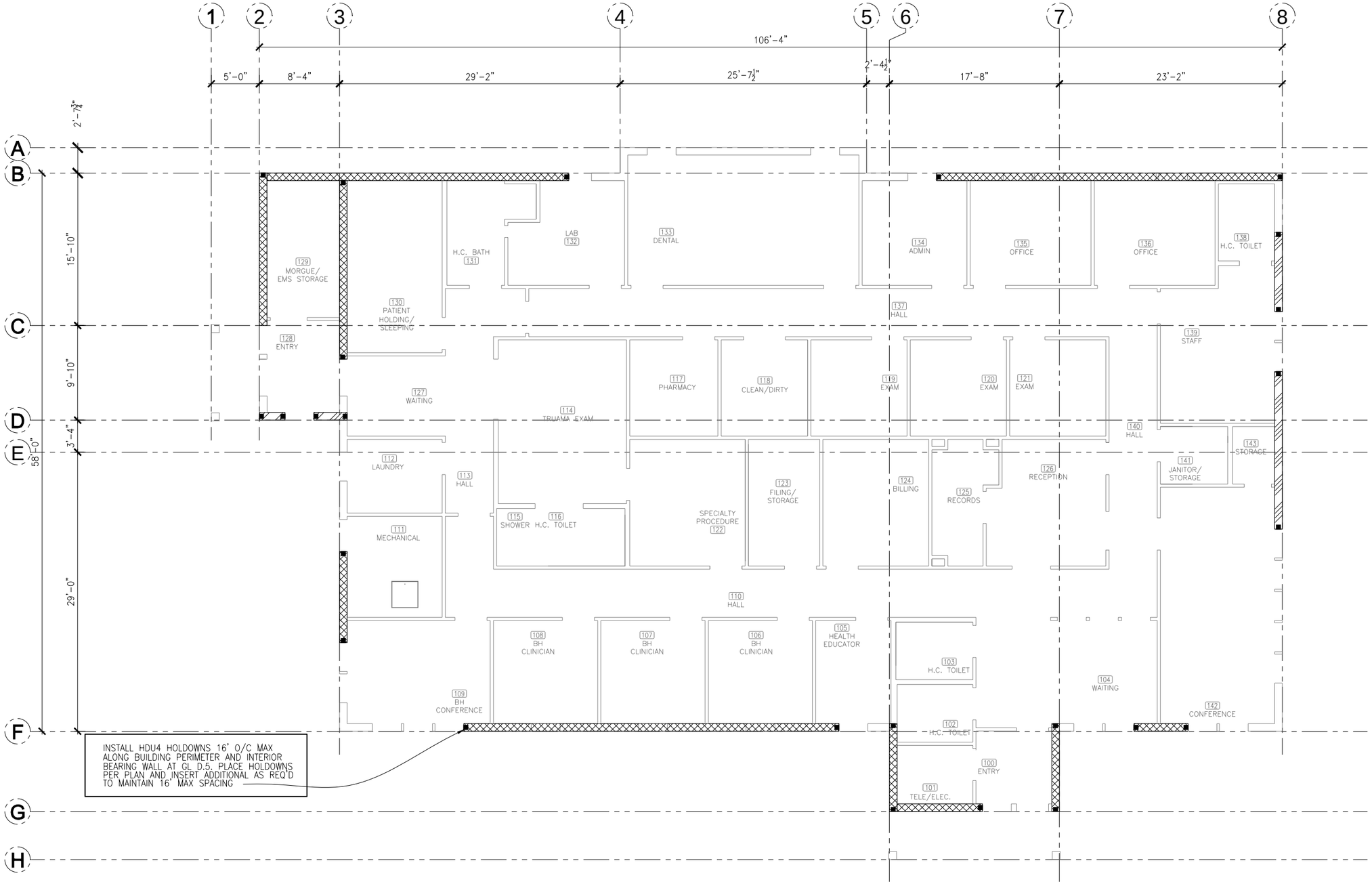

SHEARWALL SCHEDULE

MARK	SHEATHING	FASTENING	
	7/16" OSB ONE SIDE	8D @ 6" O/C EDGES	8D @ 12" O/C FIELD
	7/16" OSB ONE SIDE	8D @ 4" O/C EDGES	8D @ 12" O/C FIELD
	5/8"X12" BENT ANCHOR BOTS AT 32" O/C UNO		

- HDU 4 HOLD DOWN PER DETAIL D/S2.1

1 SHEARWALL PLAN

0 3' 6' 12' 18'
GRAPHIC SCALE

REF. N
E W
S

INIT.	REVISIONS	DATE

STATE OF ALASKA 49TH William J. Nelson CE-5460 4/20/09 Registered Professional Engineer

ALASKA NATIVE TRIBAL HEALTH CONSORTIUM

DIVISION OF ENVIRONMENTAL HEALTH AND ENGINEERING
1901 SOUTH BRAGAW STREET, SUITE 200
ANCHORAGE, ALASKA, 99508-3440
(907) 729-3600

ALASKA NATIVE TRIBAL HEALTH CONSORTIUM

McGRATH SUB-REGIONAL HEALTH CENTER
SHEARWALL FRAMING PLAN

FILE NAME:
PROJECT NO: 0198
PROJ ARCH. BK

DATE: 4/20/2009
SCALE: AS NOTED
DRAWN BY: MJD

SHEET S-4.0

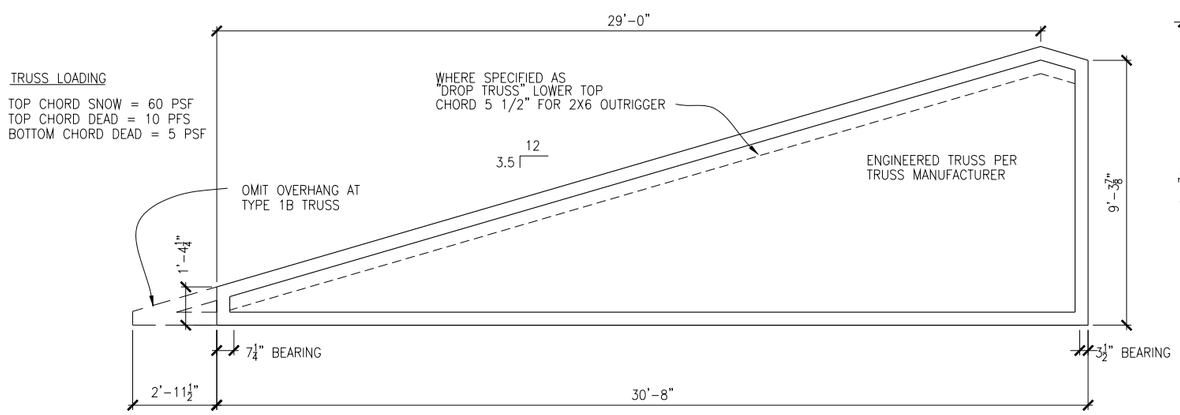

A S5.0 TYPE 1 AND TYPE 1B TRUSS

3/8=1'=0" 0 1' 2' 4' 6' 8' GRAPHIC SCALE

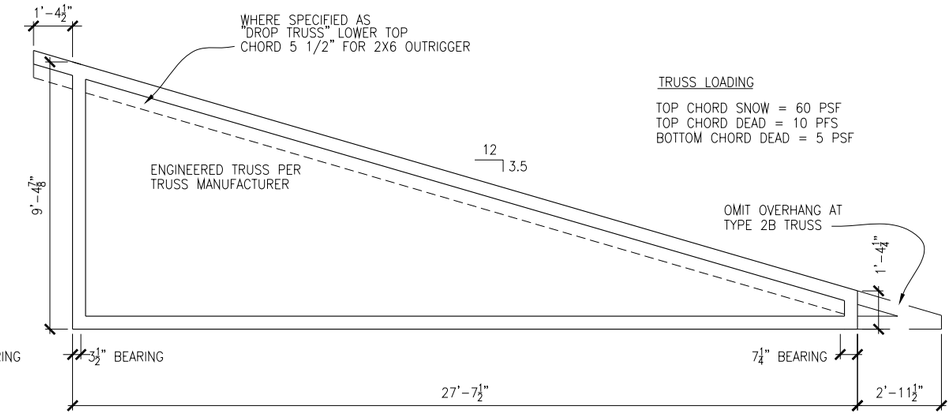

B S5.0 TYPE 2 AND TYPE 2B TRUSS

3/8=1'=0" 0 1' 2' 4' 6' 8' GRAPHIC SCALE

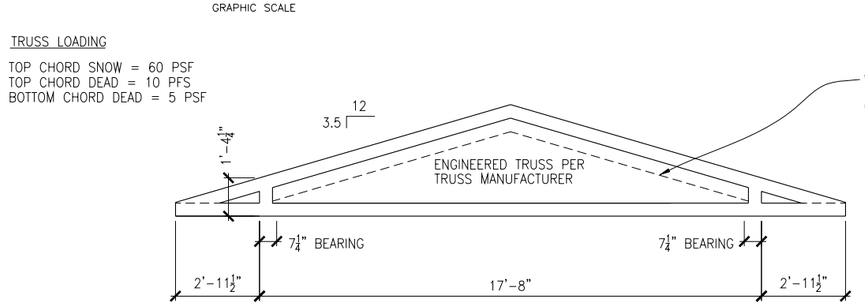

C S5.0 TYPE 3 TRUSS

3/8=1'=0" 0 1' 2' 4' 6' 8' GRAPHIC SCALE

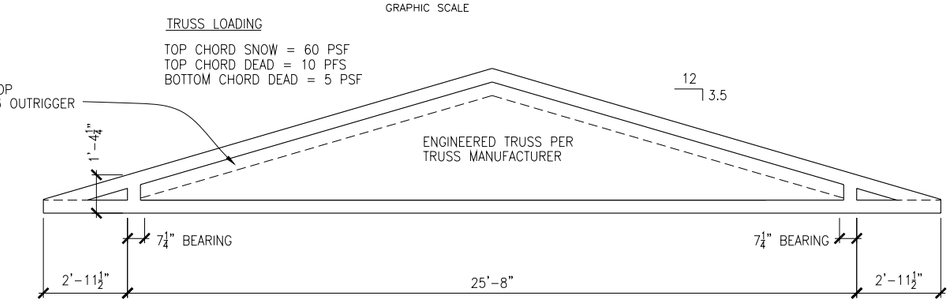

D S5.0 TYPE 4 TRUSS

3/8=1'=0" 0 1' 2' 4' 6' 8' GRAPHIC SCALE

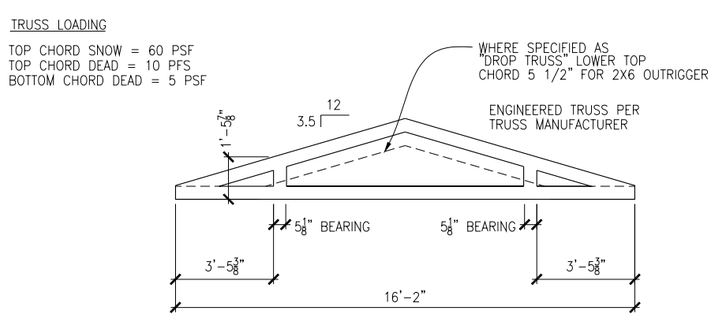

E S5.0 TYPE 5 TRUSS

3/8=1'=0" 0 1' 2' 4' 6' 8' GRAPHIC SCALE

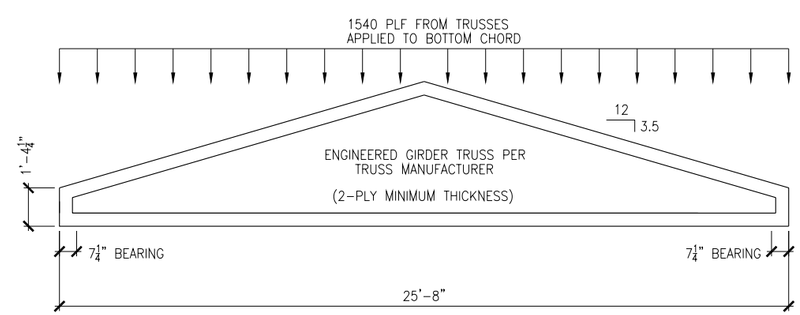

F S5.0 TYPE 6 GIRDER TRUSS

3/8=1'=0" 0 1' 2' 4' 6' 8' GRAPHIC SCALE

INIT.	REVISIONS	DATE

STATE OF ALASKA 49TH William J. Nelson CE-5460 4/20/09 Registered Professional Engineer

ALASKA NATIVE TRIBAL HEALTH CONSORTIUM

DIVISION OF ENVIRONMENTAL HEALTH AND ENGINEERING
1901 SOUTH BRAGAW STREET, SUITE 200
ANCHORAGE, ALASKA, 99508-3440
(907) 729-3600

McGRATH SUB-REGIONAL HEALTH CENTER
TRUSS PROFILES

FILE NAME:
PROJECT NO: 0198
PROJ ARCH.: BK

DATE: 4/20/2009
SCALE: AS NOTED
DRAWN BY: MJD

SHEET S-5.0

8 OF 8

ABBREVIATIONS

AD	ACCESS DOOR
AFF	ABOVE FINISHED FLOOR
AMPS	AMPERES
APD	AIR PRESSURE DROP
ARCH	ARCHITECTURAL
AS	AIR SEPARATOR
ASSY	ASSEMBLY
AWT	AVERAGE WATER TEMPERATURE
B	BOILER
BB	BASEBOARD
BDD	BACKDRAFT DAMPER
BTUH	BRITISH THERMAL UNIT / HOUR
C/A	COMBUSTION AIR
CFM	CUBIC FEET PER MINUTE
CLG	CEILING
CONT	CONTINUED
CO	CLEANOUT
CONN	CONNECTION
CP	CIRCULATION PUMP
CUH	CABINET UNIT HEATER
CW	COLD WATER
ø	DIAMETER
DA	DENTAL AIR
DC	DUCT COIL
DEG	DEGREE
DN	DOWN
DVAC	DENTAL VACUUM
DWG	DRAWING
E/A	EXHAUST AIR
EAT	ENTERING AIR TEMPERATURE
EF	EXHAUST FAN
ET	EXPANSION TANK
EXH	EXHAUST
EWT	ENTERING WATER TEMPERATURE
ESP	EXTERNAL STATIC PRESSURE
EGT	ENTERING GLYCOL TEMPERATURE
FT	FEET
FPM	FEET PER MINUTE
FPF	FINS PER FOOT
F	FAHRENHEIT
FCO	FLOOR CLEAN OUT
FOT	FUEL OIL TANK
FW	FIRE WATER
FR	FRACTIONAL
GPH	GALLONS PER HOUR
GPM	GALLONS PER MINUTE
GR	GREASE TRAP
GT	GLYCOL TANK
HB	HOSE BIBB
HC	HEATING COIL
HD	HEAD
HGR	HEATING GLYCOL RETURN
HGS	HEATING GLYCOL SUPPLY
HRV	HEAT RECOVERY VENTILATOR
HW	HOT WATER
HWG	HOT WATER GENERATOR
HP	HORSEPOWER
ID	INSIDE DIAMETER
IN	INCHES
LAT	LEAVING AIR TEMPERATURE
LF	LINEAL FEET
LGT	LEAVING GLYCOL TEMPERATURE
LWT	LEAVING WATER TEMPERATURE
MAX	MAXIMUM
MBH	THOUSAND BTU PER HOUR
MFGR	MANUFACTURER
MIN	MINIMUM
MTD	MOUNTED
NC	NOISE CRITERIA
N.C.	NORMALLY CLOSED
N.O.	NORMALLY OPEN
NTS	NOT TO SCALE
OC	ON CENTER
O/A	OUTSIDE AIR
OD	OUTSIDE DIAMETER
PD	PRESSURE DROP
PG	PROPYLENE GLYCOL
PH	PHASE
PRV	PRESSURE REDUCING VALVE
PSI	POUNDS PER INCH
R/A	RETURN AIR
RGR	RADIANT HEATING GLYCOL RETURN
RGS	RADIANT HEATING GLYCOL SUPPLY
RPM	REVOLUTIONS PER MINUTE
S/A	SUPPLY AIR
SP	STATIC PRESSURE
TEMP	TEMPERATURE
TSP	TOTAL STATIC PRESSURE
TSTAT	THERMOSTAT
TYP	TYPICAL
UH	UNIT HEATER
V	VENT
VTR	VENT THROUGH ROOF
WC	WATER COLUMN
WG	WATER GAGE
WCO	WALL CLEAN OUT
W	WASTE
WTD	WATER TEMPERATURE DROP

MECHANICAL LEGEND

- WASTE
- VENT PIPING
- COLD WATER
- HOT WATER
- XXX — SEE ABBREVIATIONS FOR MEDIA
- PIPE UP
- PIPE DOWN
- TEE UP
- TEE DOWN
- UNION
- DIRECTION OF FLOW
- ISOLATION VALVE
- 2-WAY CONTROL VALVE
- CHECK VALVE
- BALANCE VALVE
- PRESSURE/TEMPERATURE RELIEF VALVE
- THERMOMETER
- FLOOR CLEANOUT
- FLOOR DRAIN
- FLOOR SINK
- SUPPLY AIR UP & DOWN (SQUARE)
- EXHAUST AIR UP & DOWN (SQUARE)
- ROUND DUCT UP & DOWN
- T — THERMOSTAT OR SENSOR
- TR — REVERSE ACTING THERMOSTAT
- H — HUMIDISTAT SENSOR
- 1 — SHEET NOTES
- XX:XXX — CFM
- DIFFUSER OR GRILLE TYPE
- 1 / M1 — DETAIL NUMBER / SHEET LOCATED ON
- BASEBOARD DESIGNATION
- BB-1 / 1.0 | 12' — ACTIVE LENGTH / GPM

PLUMBING FIXTURE SCHEDULE

SYMBOL	FIXTURE	MINIMUM CONNECTION SIZE CW	HW	WASTE	VENT	TRAP	MANUFACTURER	MODEL	COLOR	TRIM / REMARKS
WC-1	WATER CLOSET – FLOOR MOUNT – ADA	1/2"	---	3"	2"	---	KOHLER	HIGHLINE K-3493	WHITE	ELONGATED BOWL, COVER, SPLIT RIM SEAT
LV-1	LAVATORY – WALL MOUNT – ADA	1/2"	1/2"	1-1/2"	1-1/2"	1-1/4"	KOHLER	KINGSTON K-2005	WHITE	DELTA FAUCET 516 WFHDF WITH METAL GRID STRAINER, CONCEALED ARM
										SUPPORTS, WALL CARRIER FOR ADA HEIGHT, INSULATE TRAP AND HW SUPPLY
SK-1	SINK – EXAM	1/2"	1/2"	2"	1-1/2"	2"	PER FF&E PACKAGE		---	PER FF&E PACKAGE
SK-2	SINK – SPECIALTY PROCEDURE	1/2"	1/2"	2"	1-1/2"	2"	PER FF&E PACKAGE		---	PER FF&E PACKAGE
SK-3	SINK – BAR	1/2"	1/2"	2"	1-1/2"	1-1/2"	JUST	SL-1617-A-GR	STAINLESS	DELTA FAUCET 3579 WFHDF, RIGID
SK-4	SINK – KITCHEN	1/2"	1/2"	2"	1-1/2"	1-1/2"	JUST	SLX-1617-A-GR	STAINLESS	DELTA FAUCET 3579 WFHDF, RIGID
SK-5	SINK – DOUBLE COMPARTMENT – LAB	1/2"	1/2"	2"	1-1/2"	2"	JUST	DL-1829-A-GR	STAINLESS	DELTA FAUCET 711-WFHDF, HAWS 7610 EMERGENCY EYEWASH, SWING
SK-6	SINK	1/2"	1/2"	2"	1-1/2"	2"	PER DENTAL EQUIPMENT SUPPLIER		STAINLESS	PER DENTAL EQUIPMENT SUPPLIER
SK-7	SINK – LAUNDRY	1/2"	1/2"	2"	1-1/2"	2"	FIAT	FL-1	WHITE	FIAT FAUCET A-1
SK-8	SINK – SERVICE	1/2"	1/2"	3"	2"	3"	FIAT	MSB-2424	WHITE	FIAT FAUCET 830-AA, 832-AA HOSE AND BRACKET, E-77-AA VINYL
										BUMPERGUARD, 889-CC MOP HANGER
DS-1	SINK – DENTAL	1/2"	1/2"	3"	2"	3"	PER DENTAL EQUIPMENT SUPPLIER		STAINLESS	PER DENTAL EQUIPMENT SUPPLIER
SH-1	SHOWER – ADA	1/2"	1/2"	2"	1-1/2"	2"	FIAT	3636.01F	WHITE	RPW1111HDF, 60" FLEX HOSE, ADJUSTABLE WALL BRACKET,
										ADJUSTABLE MAXIMUM TEMP., INTEGRAL CHECK STOPS,
										PRESSURE BALANCED, VACUUM BREAKER
SV-1	SHOWER VALVE	1/2"	1/2"	---	---	---	DELTA	1305-WSHDF	---	RPW1111HDF, 60" FLEX HOSE, ADJUSTABLE WALL BRACKET,
										ADJUSTABLE MAXIMUM TEMP., INTEGRAL CHECK STOPS,
										PRESSURE BALANCED, VACUUM BREAKER
DF-1	DRINKING FOUNTAIN – SINGLE – ADA	1/2"	---	1-1/2"	1-1/2"	1-1/4"	HAWS	1109	STAINLESS	FRONT PUSH BUTTON, 6800 SUPPORT CARRIER, 6700 MOUNTING PLATE
WB-1	WASHER BOX	3/4"	3/4"	2"	1-1/2"	2"	GUY GRAY	T200	---	DRAIN ADAPTOR FOR DWV COPPER
FD-1	FLOOR DRAIN	---	---	2"	1-1/2"	2"	J.R. SMITH	2010-WF	---	ROUND TOP, TRAP PRIMER CONNECTION
FD-2	FLOOR DRAIN	---	---	2"	1-1/2"	2"	J.R. SMITH	DX-2005	---	ROUND TOP, TRAP PRIMER CONNECTION
HB-1	HOSE BIBB – FROST PROOF	3/4"	---	---	---	---	WOODFORD	MODEL 65	---	WITH TEE HANDLE, VACUUM BREAKER

EXPANSION TANK SCHEDULE

SYMBOL	MFGR / MODEL	FUNCTION	FLUID	TOTAL VOLUME (GALLONS)	ACCEPTANCE VOLUME (GALLONS)	DIMENSIONS	MATERIAL	LABEL	REMARKS
ET-1	AMTROL / SX-40V	HYDRONIC EXPANSION	50% P.G.	20	11.3	15"ø x 32"	STEEL/BUTYL	---	---
ET-2	AMTROL / ST-12	DOMESTIC HW EXPANSION	WATER	4.4	3.2	11"ø x 15"	STEEL/BUTYL	IAPMO	APPROVED FOR POTABLE WATER USE

GLYCOL MAKE-UP TANK SCHEDULE

SYMBOL	MFGR / MODEL	FUNCTION	FLUID	CAPACITY (GALLONS)	DIMENSIONS	MATERIAL	REMARKS
GT-1	AXIOM / MF200	GLYCOL MAKE UP	50% P.G.	6.6	12"x12"x16"H	PLASTIC	LOW LEVEL ALARM, ELECTRIC CORD AND PLUG

TANK SCHEDULE

SYMBOL	MFGR / MODEL	FUNCTION	FLUID	CAPACITY (GALLONS)	DIMENSIONS	MATERIAL	LABEL	REMARKS
FOT-1	ACE TANK / AC00550U2K4	FUEL OIL STORAGE	F.O.	550	48"ø x 75"	STEEL	UL	DOUBLE WALL, ABOVE GROUND, SKID MOUNTED

HOT WATER GENERATOR SCHEDULE

SYMBOL	MFGR / MODEL	DOMESTIC HOT WATER RECOVERY (GPH)	CAPACITY (GAL)	EWT	LWT	HEATING MEDIUM FLUID	FLOW (GPM)	WPD (FT HD)	EGT	LGT	LABEL	REMARKS
HWG-1	AMTROL / WHS-60ZC-DW	268	60	40°F	120°F	50% P.G	7	10'	180°F	150°F	---	DOUBLE WALL VENTED COIL

PUMP SCHEDULE

SYMBOL	MFGR / MODEL	SERVICE	FLUID	GPM	HEAD FT.	MOTOR DATA HP	VOLTS/PH	REMARKS
CP-1	GRUNDFOS / UPS 40-160/2	PERIMETER HEAT	50% P.G.	28.4	25'	3/4	208/3	SET INITIALLY AT SPEED ONE
CP-2	GRUNDFOS / UPS 40-160/2	PERIMETER HEAT	50% P.G.	28.4	25'	3/4	208/3	BACKUP TO CP-1, SET INITIALLY AT SPEED ONE
CP-3	GRUNDFOS / UP 26-96F	HOT WATER GENERATOR	WATER	7	17'	1/12	120/1	---
CP-4	GRUNDFOS / UP 15-18 B7	HOT WATER CIRCULATION	WATER	2	4'	1/25	120/1	BRONZE CONSTRUCTION

DENALI COMMISSION ALASKA

DATE	REVISIONS	INIT.

STATE OF ALASKA PROFESSIONAL ENGINEER ALEC C. THOMSON ME-8694 REGISTERED PROFESSIONAL ENGINEER 04/20/09

ALASKA NATIVE TRIBAL HEALTH CONSORTIUM

DIVISION OF ENVIRONMENTAL HEALTH AND ENGINEERING
1901 SOUTH BRAGAW STREET, SUITE 200
ANCHORAGE, ALASKA, 99508-3440
(907) 729-3600

McGRATH SUB-REGIONAL HEALTH CENTER

EQUIPMENT SCHEDULES
LEGEND & ABBREVIATIONS

DATE: 04/20/09
SCALE: AS NOTED
DRAWN BY: TCH

FILE NAME: 08167-M01
LAYOUT NAME: LAYOUT1
PROJ ENG: ALEC C. THOMSON, P.E.

SHEET
M0.1

1 OF 8M

SEQUENCE OF OPERATION

BOILERS (B–1 AND B–2)
BOILER CONTROLLER SHALL CONTROL BOILER CIRCULATION PUMPS AND FIRE BOILER TO MAINTAIN SUPPLY TEMPERATURE BETWEEN 180°F AND 150°F BASED ON OUTSIDE AIR TEMPERATURE. BOILER CONTROLLER SHALL SHUT DOWN BOILER AND LEAD SYSTEM CIRCULATION PUMP, CP–1 OR CP–2, ON OUTSIDE AIR TEMPERATURES OF 65°F (ADJUSTABLE) AND HIGHER. ON CALL FOR HEAT FROM THE HOT WATER GENERATOR CIRCULATION PUMP, CP–3 SHALL OPERATE, CONTROL VALVE SHALL OPEN AND BOILER SHALL FIRE TO MAINTAIN BOILER TEMPERATURE OF 180°F (ADJUSTABLE). REDUNDANT HIGH LIMIT CONTROLLER SHALL DISABLE BOILER ABOVE 210°F. AT LOW WATER CONDITION, LOW WATER CUT–OFF SHALL DISABLE BOILER, PROVIDE MANUAL RESET.

CIRCULATION PUMP (CP–1 AND CP–2)
CP–1 AND CP–2 LEAD DESIGNATION SHALL BE BY PUMPS MANUAL DISCONNECTS.

CIRCULATION PUMP (CP–3)
PUMP SHALL RUN AS INDICATED UNDER BOILER SEQUENCE.

CIRCULATION PUMP (CP–4)
PUMP SHALL RUN CONTINUOUSLY.

HOT WATER GENERATOR (HWG–1)
WATER HEATER'S AQUASTAT SHALL CALL FOR HEAT TO MAINTAIN TANK WATER TEMPERATURE OF 115°F (ADJUSTABLE). CONTROL VALVE SHALL OPEN AND CIRCULATION PUMP, CP–3, SHALL OPERATE. COORDINATE WITH BOILER CONTROL SEQUENCE.

BASEBOARD RADIATION (BB–1 AND BB–2)
ON SECOND STAGE OF HEAT ZONE THERMOSTAT SHALL CYCLE ZONE CONTROL VALVE TO MAINTAIN SPACE TEMPERATURE.

CABINET UNIT HEATERS (CUH–1 AND CUH–2)
THERMOSTAT SHALL CYCLE BLOWER TO MAINTAIN SPACE TEMPERATURE.

UNIT HEATER (UH–1, UH–2 AND UH–3)
THERMOSTAT SHALL CYCLE BLOWER TO MAINTAIN SPACE TEMPERATURE.

EXHAUST FAN (EF–1, EF–2, EF–3, EF–4 AND EF–6)
ON–OFF CONTROL VIA WALL MOUNTED SWITCH.

EXHAUST FAN (EF–5 AND EF–7)
ON TEMPERATURE RISE ABOVE LINE VOLTAGE THERMOSTAT SETPOINT (ADJUSTABLE) FAN SHALL OPERATE.

EXHAUST FAN (EF–9)
ON TEMPERATURE RISE ABOVE LINE VOLTAGE THERMOSTAT SETPOINT (ADJUSTABLE) FAN SHALL OPERATE AND VENTILATION OPENING CONTROL DAMPER SHALL OPEN.

EXHAUST FAN (EF–8)
ON–OFF CONTROL VIA HUMDISTAT. ON HUMIDITY RISE ABOVE SETPOINT (ADJUSTABLE) FAN SHALL OPERATE.

HEAT RECOVERY VENTILATOR (HRV–1)
UNIT SHALL OPERATE CONTINUOUSLY DURING OCCUPIED HOURS, BASED ON 7–DAY, 24–HOUR PROGRAM AS DETERMINED BY OWNER. UNIT MOUNTED ELECTRONIC CONTROLLER SHALL CONTROL FAN SPEED. HUMIDISTAT SHALL INCREASE SPEED AUTOMATICALLY AS REQUIRED TO MAINTAIN 50% RH. ELECTRONIC CONTROLLER SHALL AUTOMATICALLY ENGAGE DEFROST CYCLE AS REQUIRED TO MAINTAIN HEAT TRANSFER COIL FROST FREE. REMOTE DIGITAL ELECTRONIC TIMERS SHALL ENGAGE HRV IF UNIT IS OFF, OR BOOST HRV TO HIGH SPEED IF UNIT IS ON, FOR 20–MINUTE TIME DURATION.

DUCT COIL (DC–1)
THREE WAY CONTROL VALVE SHALL MODULATE TO MAINTAIN DUCT SUPPLY AIR TEMPERATURE (65°F ADJUSTABLE). PROVIDE CONTACTS ON VALVE SO THAT ON GREATER THAN 10% OPEN A CALL FOR HEAT IS PROVIDED TO THE BOILER.

BOILER SCHEDULE

SYMBOL	MFGR / MODEL	FLUID	FUEL	GROSS INPUT (MBH)	GROSS IBR OUTPUT (MBH)	BURNER HP	BURNER VOLTS/PH	LABEL	REMARKS
B–1	ENERGY KINETICS / EK–2 FRONTIER	50% P.G.	OIL	196	175.5	FR	120/1	UL	30 PSI RELIEF VALVE, SWING AWAY BURNER DOOR
B–2	ENERGY KINETICS / EK–2 FRONTIER	50% P.G.	OIL	196	175.5	FR	120/1	UL	30 PSI RELIEF VALVE, SWING AWAY BURNER DOOR

DUCT COIL SCHEDULE

SYMBOL	MFGR	SIZE	CFM	AIR P.D. (IN. W.C.)	VELOCITY (FPM)	EAT	LAT	GPM	FLUID	EFT	LFT	WPD (FT. HD.)	REMARKS
DC–1	TITUS	PER MFGR	415	<0.12	<700	55°F	70°F	0.5	50% P.G.	180°F	150°F	<1	HEIGHT NOT TO EXCEED ADJACENT DUCT HEIGHT

BASEBOARD RADIATION SCHEDULE

SYMBOL	MFGR / MODEL	OUTPUT (BTU/LF)	FLUID	EGT	LGT	TUBE SIZE	ELEMENT FIN SIZE	FIN PER FOOT	FIN THICKNESS	NUMBER OF TIERS	MOUNTING HEIGHT	ENCLOSURE THICKNESS	REMARKS
BB–1	STERLING / JV14B–S	1,120	50% P.G.	180°F	160°F	3/4"	4–1/4" X 3–5/8"	50	0.020"	1	18"	16 GAUGE	SLOPE TOP ENCLOSURE
BB–2	STERLING / C3/4–435	980	50% P.G.	180°F	160°F	3/4"	4–1/4" X 3–5/8"	50	0.020"	1	---	---	BARE ELEMENT

UNIT HEATER SCHEDULE

SYMBOL	MFGR / MODEL	CAPACITY MBH	GPM	FLUID	EGT	LGT	WPD FT HD	CFM	MOTOR DATA HP	MOTOR DATA VOLTS/PH	REMARKS
UH–1	MODINE / HC–47	22.7	3.2	50% P.G.	180°F	160°F	<1'	730	1/12	120/1	---
UH–2	MODINE / HC–18	9.2	1.3	50% P.G.	180°F	160°F	<1'	340	1/60	120/1	---
UH–3	MODINE / HC–18	9.2	1.3	50% P.G.	180°F	160°F	<1'	340	1/60	120/1	---
CUH–1	MODINE / CW–03	16.2	2.2	50% P.G.	180°F	160°F	<1'	330	1/30	120/1	---
CUH–2	MODINE / CW–03	16.2	2.2	50% P.G.	180°F	160°F	<1'	330	1/30	120/1	---

AIR SEPARATOR SCHEDULE

SYMBOL	MFGR / MODEL	FLUID	GPM	WPD (FT. HD)	INLET/OUTLET SIZE	DIMENSIONS	REMARKS
AS–1	SPIROTHERM / VJR 200TM	50% P.G.	34.9	<3'	2"	10.8"H x 4.0"ø	---

HEAT RECOVERY VENTILATOR SCHEDULE

SYMBOL	MFGR / MODEL	AIRFLOW (CFM)	TSP @ HIGH SPEED (IN. WG)	ELEC. DATA WATTS	ELEC. DATA VOLTS/PH	REMARKS
HRV–1	LIFEBREATH / 500 DCS	415	0.5	610	120/1	BALANCE DAMPERS/AIR FLOW STATION, PROGRAMMABLE CONTROLLER WITH DEHUMIDISTAT, TIME CLOCK,
						REMOTE DIGITAL TIMER

FAN SCHEDULE

SYMBOL	MFGR / MODEL	TYPE	SERVICE	CFM	TSP (IN. WG)	MOTOR DATA AMPS	MOTOR DATA VOLTS/PH	DRIVE	SONES	REMARKS
EF–1	GREENHECK / SP–B90	CENTRIFUGAL	TOILET EXHAUST	75	0.25	0.65	120/1	DIRECT	<5	WALL CAP, BACKDRAFT DAMPER
EF–2	GREENHECK / SP–B90	CENTRIFUGAL	TOILET EXHAUST	75	0.25	0.65	120/1	DIRECT	<5	WALL CAP, BACKDRAFT DAMPER
EF–3	GREENHECK / SP–B90	CENTRIFUGAL	TOILET EXHAUST	75	0.25	0.65	120/1	DIRECT	<5	WALL CAP, BACKDRAFT DAMPER
EF–4	GREENHECK / SP–B90	CENTRIFUGAL	TOILET EXHAUST	75	0.25	0.65	120/1	DIRECT	<5	WALL CAP, BACKDRAFT DAMPER
EF–5	GREENHECK / SP–B200	CENTRIFUGAL	MORGUE EXHAUST	166	0.25	2.2	120/1	DIRECT	<6	WALL CAP, BACKDRAFT DAMPER
EF–6	GREENHECK / SP–B90	CENTRIFUGAL	LAB EXHAUST	75	0.25	0.65	120/1	DIRECT	<5	WALL CAP, BACKDRAFT DAMPER
EF–7	GREENHECK / SP–B150	CENTRIFUGAL	TELE/ELECTRICAL COOLING	150	0.25	1.7	120/1	DIRECT	<5	WALL CAP, BACKDRAFT DAMPER
EF–8	GREENHECK / SP–B150	CENTRIFUGAL	CRAWLSPACE EXHAUST	150	0.25	1.7	120/1	DIRECT	<5	WALL CAP, BACKDRAFT DAMPER
EF–9	GREENHECK / CSP–A510	CENTRIFUGAL	MECHANICAL ROOM COOLING	405	0.25	3.11	120/1	DIRECT	<5	WALL CAP, BACKDRAFT DAMPER

GRILLE - REGISTER - DIFFUSER SCHEDULE

SYMBOL	MFGR / MODEL	TYPE	SERVICE	MATERIAL	FINISH	FACE SIZE	DIFFUSER NECK SIZE	THROW	REMARKS
SA	LIFEBREATH / TECHGRILLE	DIFFUSER	S/A	POLYPROPYLENE	WHITE	6.25"ø	5"ø"	4–WAY	ROUND FACE, AIRFLOW ADJUSTABLE BY POSITIONING CENTER CONE
SB	LIFEBREATH / TECHGRILLE	DIFFUSER	S/A	POLYPROPYLENE	WHITE	7.5"ø	6"ø"	4–WAY	ROUND FACE, AIRFLOW ADJUSTABLE BY POSITIONING CENTER CONE
SC	TITUS / CT–PP–O	GRILLE	---	ALUMINUM	WHITE	4"WIDE	---	---	LENGHT TO MATCH CABINET LENGTH COORDINATE WITH ARCHITECTURAL
EA	LIFEBREATH / TECHGRILLE	DIFFUSER	E/A	POLYPROPYLENE	WHITE	6.25"ø	5"ø"	4–WAY	ROUND FACE, AIRFLOW ADJUSTABLE BY POSITIONING CENTER CONE
EB	LIFEBREATH / TECHGRILLE	DIFFUSER	E/A	POLYPROPYLENE	WHITE	7.5"ø	6"ø"	4–WAY	ROUND FACE, AIRFLOW ADJUSTABLE BY POSITIONING CENTER CONE
TA	TITUS / CT–700L	GRILLE	T/A	ALUMINUM	WHITE	18/6	---	---	WITH AUXILIARY FRAME, MOUNT LOW IN DOOR

DENALI COMMISSION ALASKA

INIT. | REVISIONS | DATE

STATE OF ALASKA 24GB EXPIRES 06/30/09 ALEC C. THOMSON ME-8694 REGISTERED PROFESSIONAL ENGINEER 04/20/09

ALASKA NATIVE TRIBAL HEALTH CONSORTIUM

DIVISION OF ENVIRONMENTAL HEALTH AND ENGINEERING
1901 SOUTH BRAGAW STREET, SUITE 200
ANCHORAGE, ALASKA, 99508–3440
(907) 729–3600

McGRATH SUB–REGIONAL HEALTH CENTER
EQUIPMENT SCHEDULES

FILE NAME: 08167–M02
LAYOUT NAME: LAYOUT1
PROJ ENG: ALEC C. THOMSON, P.E.

DATE: 04/20/09
SCALE: AS NOTED
DRAWN BY: TCH

SHEET M0.2

2 OF 8M

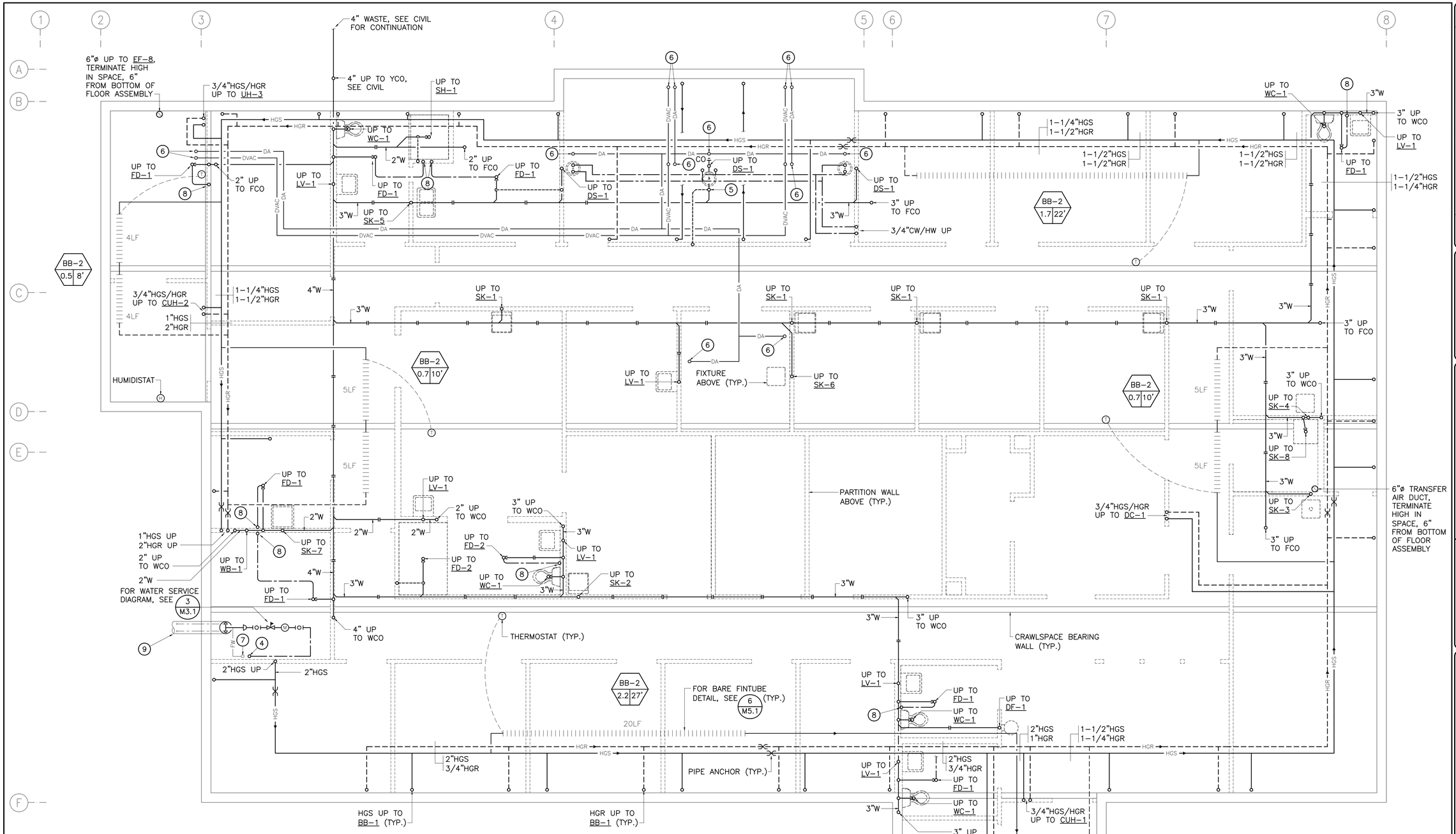

SHEET NOTES

1. BRANCH PIPING TO INDIVIDUAL PLUMBING FIXTURES SHALL EQUAL THE SIZE REQUIRED BY THE PLUMBING FIXTURES SCHEDULE UNLESS OTHERWISE INDICATED
2. PROVIDE CLEANOUTS ON ALL SINK AND DRINKING FOUNTAIN RISERS.
3. BRANCH PIPING TO INDIVIDUAL TERMINAL HEATING UNITS SHALL BE 3/4" UNLESS OTHERWISE INDICATED.

(4) 1-1/2" WATER SERVICE UP.

(5) ISLAND VENT PER UNIFORM PLUMBING CODE.

(6) DENTAL AIR AND/OR DENTAL VACUUM UP TO DENTAL EQUIPMENT. COORDINATE SIZE AND CONNECTION REQUIREMENTS WITH DENTAL EQUIPMENT SUPPLIER.

(7) FIRE SPRINKLER WATER (G) UP.

(8) 1/2" COLD WATER UP TO TRAP PRIMER. SEE 2/M4.1.

(9) 2" WATER SERVICE AND 3/4" RETURN IN HEAT TRACED INSULATED CARRIER PIPE, SEE CIVIL FOR CONTINUATION.

10. COORDINATE PIPE PENETRATIONS OF CRAWLSPACE BEARING WALLS TO AVOID STUDS. COORDINATE WITH STRUCTURAL.

1 / M1.1 CRAWLSPACE PIPING PLAN

SCALE: 0 2' 4' 6' / 1' 3' 5'

REF. NORTH

INIT.	REVISIONS	DATE

STATE OF ALASKA — ALEC C. THOMSON — AE-8694 — REGISTERED PROFESSIONAL ENGINEER — 04/20/09

ALASKA NATIVE TRIBAL HEALTH CONSORTIUM

DIVISION OF ENVIRONMENTAL HEALTH AND ENGINEERING
1901 SOUTH BRAGAW STREET, SUITE 200
ANCHORAGE, ALASKA, 99508-3440
(907) 729-3600

McGRATH SUB-REGIONAL HEALTH CENTER
CRAWLSPACE PLUMBING PLAN

FILE NAME: 08167-M11
LAYOUT NAME: LAYOUT1
PROJ ENG: ALEC C. THOMSON, P.E.

DATE: 04/20/09
SCALE: AS NOTED
DRAWN BY: TCH

SHEET M1.1

3 OF 8M

DENALI COMMISSION ALASKA

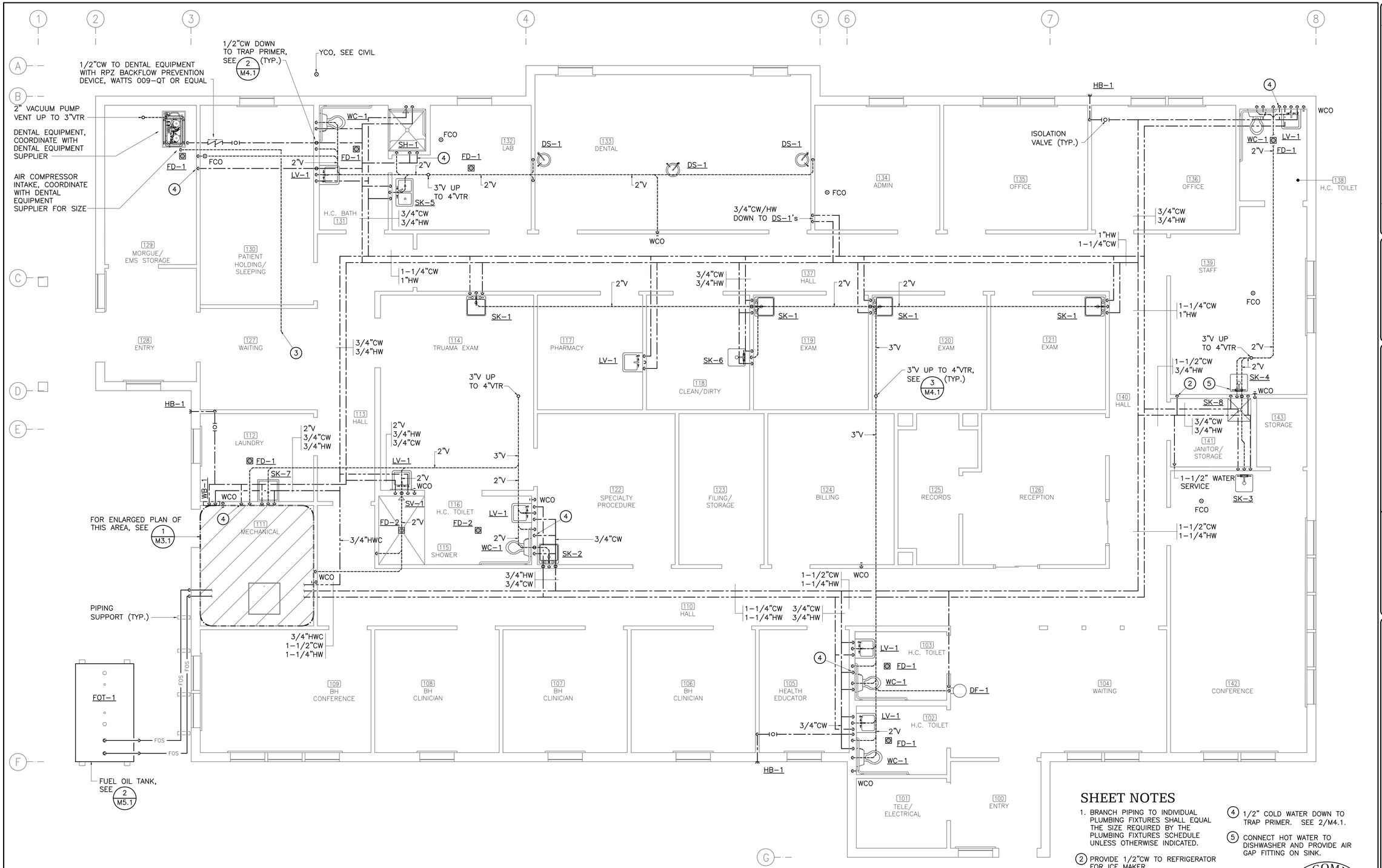

1 / M1.2 PLUMBING PLAN

SCALE: 0 2' 4' 6' / 1' 3' 5'

SHEET NOTES

1. BRANCH PIPING TO INDIVIDUAL PLUMBING FIXTURES SHALL EQUAL THE SIZE REQUIRED BY THE PLUMBING FIXTURES SCHEDULE UNLESS OTHERWISE INDICATED.

2. PROVIDE 1/2"CW TO REFRIGERATOR FOR ICE MAKER.

3. TERMINATE DENTAL AIR COMPRESSOR INTAKE IN THE WAITING ROOM CEILING SPACE. COORDINATE PIPE SIZE WITH DENTAL AIR COMPRESSOR REQUIREMENTS.

4. 1/2" COLD WATER DOWN TO TRAP PRIMER. SEE 2/M4.1.

5. CONNECT HOT WATER TO DISHWASHER AND PROVIDE AIR GAP FITTING ON SINK.

INIT.	REVISIONS	DATE

STATE OF ALASKA — ALEC C. THOMSON — ME-8694 — REGISTERED PROFESSIONAL ENGINEER — 04/20/09

ALASKA NATIVE TRIBAL HEALTH CONSORTIUM

DIVISION OF ENVIRONMENTAL HEALTH AND ENGINEERING
1901 SOUTH BRAGAW STREET, SUITE 200
ANCHORAGE, ALASKA, 99508-3440
(907) 729-3600

McGRATH SUB-REGIONAL HEALTH CENTER

PLUMBING PLAN

FILE NAME: 08167-M12
LAYOUT NAME: LAYOUT1
PROJ ENG: ALEC C. THOMSON, P.E.

DATE: 04/20/09
SCALE: AS NOTED
DRAWN BY: TCH

SHEET M1.2

4 OF 8M

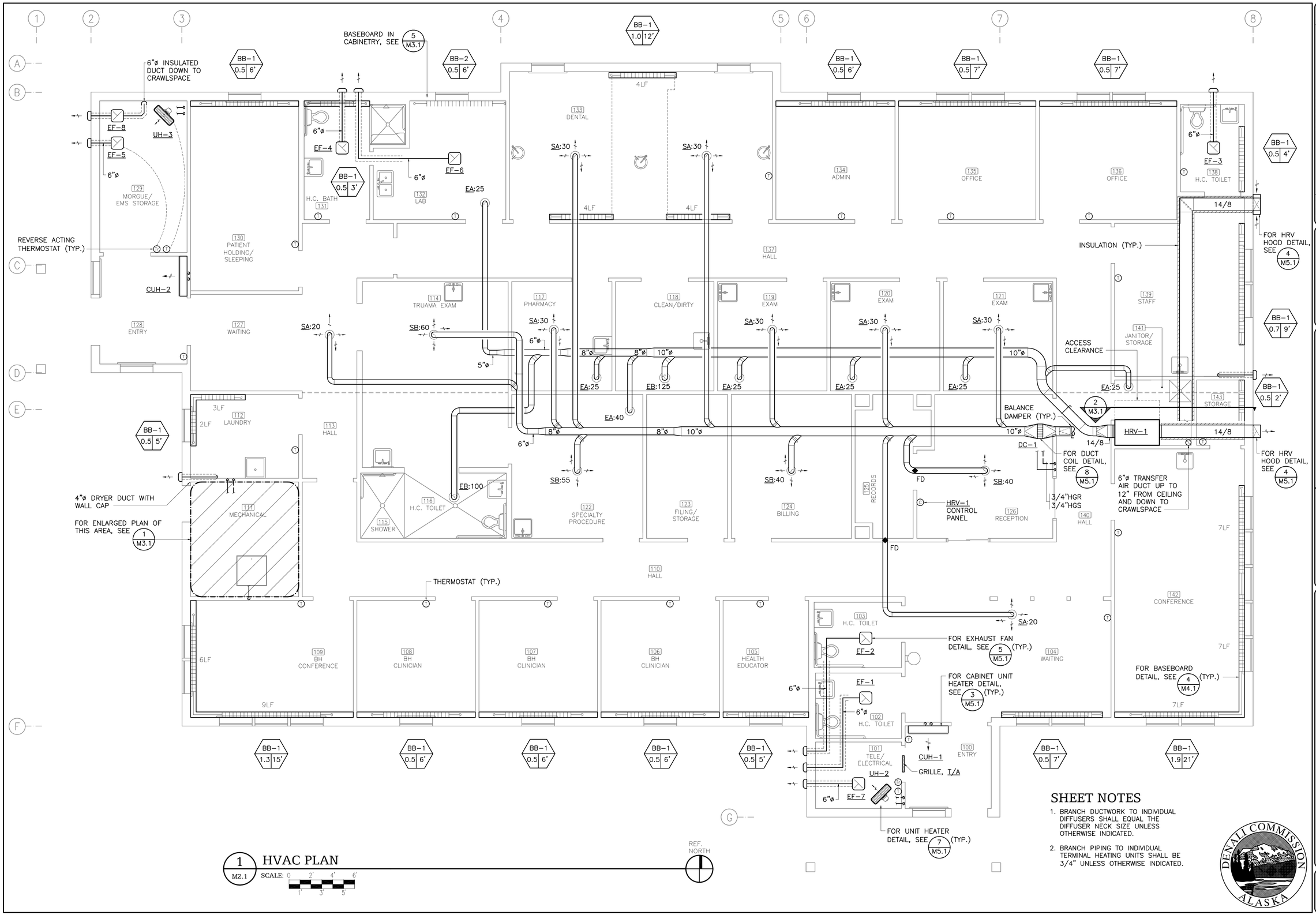

1 M2.1 HVAC PLAN

SCALE: 0 2' 4' 6' / 1' 3' 5'

SHEET NOTES

1. BRANCH DUCTWORK TO INDIVIDUAL DIFFUSERS SHALL EQUAL THE DIFFUSER NECK SIZE UNLESS OTHERWISE INDICATED.
2. BRANCH PIPING TO INDIVIDUAL TERMINAL HEATING UNITS SHALL BE 3/4" UNLESS OTHERWISE INDICATED.

DENALI COMMISSION ALASKA

INIT.	REVISIONS	DATE

STATE OF ALASKA 24 HVAC REGISTERED PROFESSIONAL ENGINEER ALEC C. THOMSON ME-8694 04/20/09

ALASKA NATIVE TRIBAL HEALTH CONSORTIUM

DIVISION OF ENVIRONMENTAL HEALTH AND ENGINEERING
1901 SOUTH BRAGAW STREET, SUITE 200
ANCHORAGE, ALASKA, 99508-3440
(907) 729-3600

McGRATH SUB-REGIONAL HEALTH CENTER
HVAC PLAN

FILE NAME: 08167-M31
LAYOUT NAME: LAYOUT1
PROJ ENG: ALEC C. THOMSON, P.E.

DATE: 04/20/09
SCALE: AS NOTED
DRAWN BY: TCH

SHEET M2.1

5 OF 8M

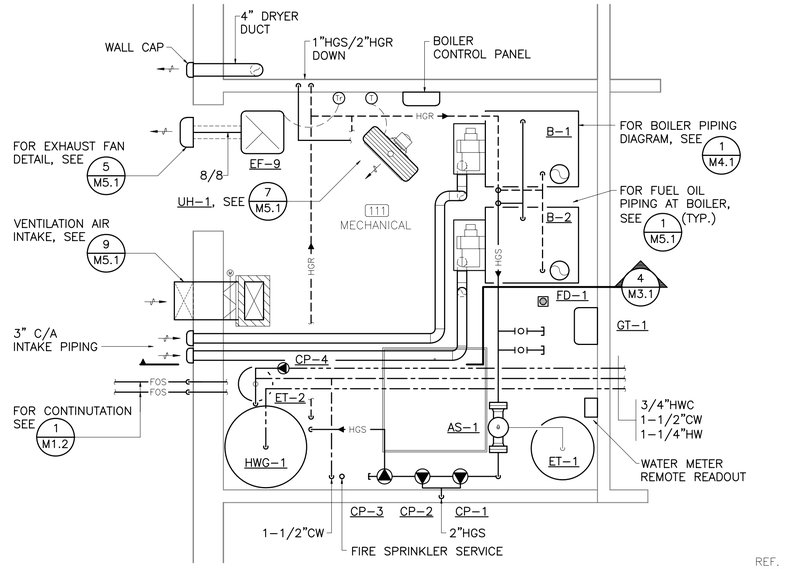

1 M3.1 MECHANICAL ROOM PLAN

SCALE: 0 1" 6" 1' 2' 3' / 3" 9"

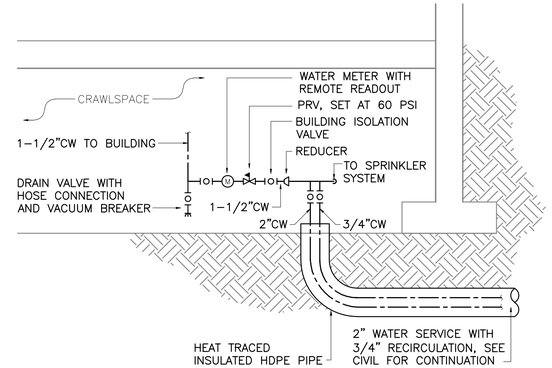

3 M3.1 WATER SERVICE DIAGRAM

SCALE: NONE

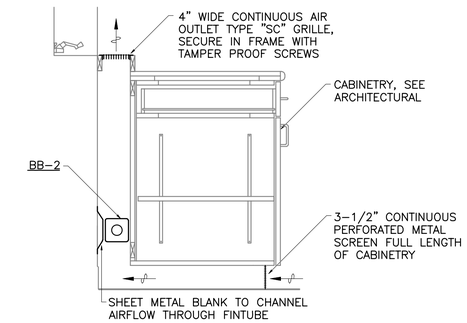

5 M3.1 BASEBOARD DETAIL

SCALE: NONE

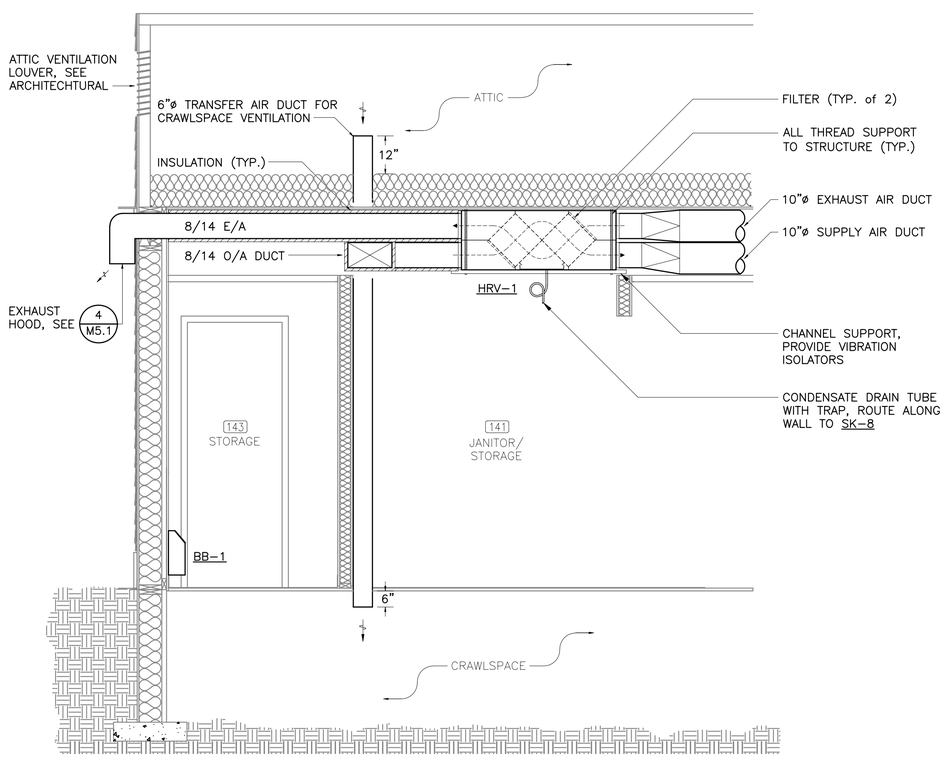

2 M3.1 JANITOR/STORAGE SECTION

SCALE: 0 1" 6" 1' 2' 3' / 3" 9"

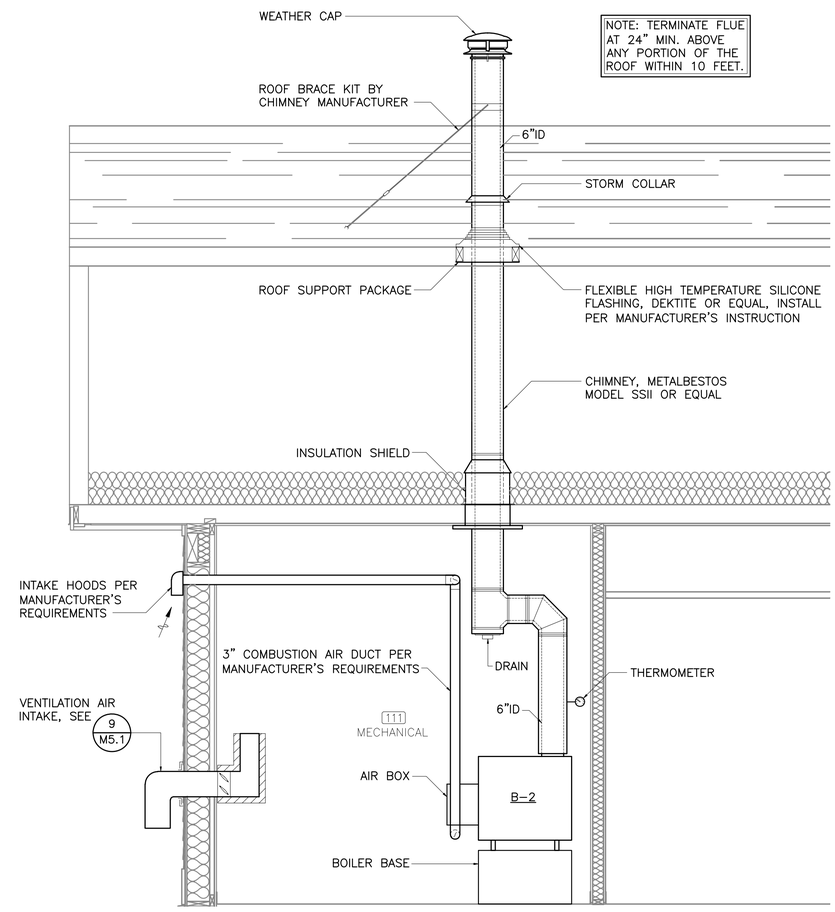

4 M3.1 BOILER ROOM SECTION

SCALE: 0 1" 6" 1' 2' 3' / 3" 9"

DATE	REVISIONS	INIT.

STATE OF ALASKA — ALEC C. THOMSON — ME-8694 — REGISTERED PROFESSIONAL ENGINEER — 04/20/09

ALASKA NATIVE TRIBAL HEALTH CONSORTIUM

DIVISION OF ENVIRONMENTAL HEALTH AND ENGINEERING
1901 SOUTH BRAGAW STREET, SUITE 200
ANCHORAGE, ALASKA, 99508-3440
(907) 729-3600

McGRATH SUB-REGIONAL HEALTH CENTER
MECHANICAL ROOM AND SECTIONS

FILE NAME: 08167-M51
LAYOUT NAME: LAYOUT1
PROJ ENG: ALEC C. THOMSON, P.E.

DATE: 04/20/09
SCALE: AS NOTED
DRAWN BY: TCH

SHEET M3.1

6 OF 8M

DENALI COMMISSION ALASKA

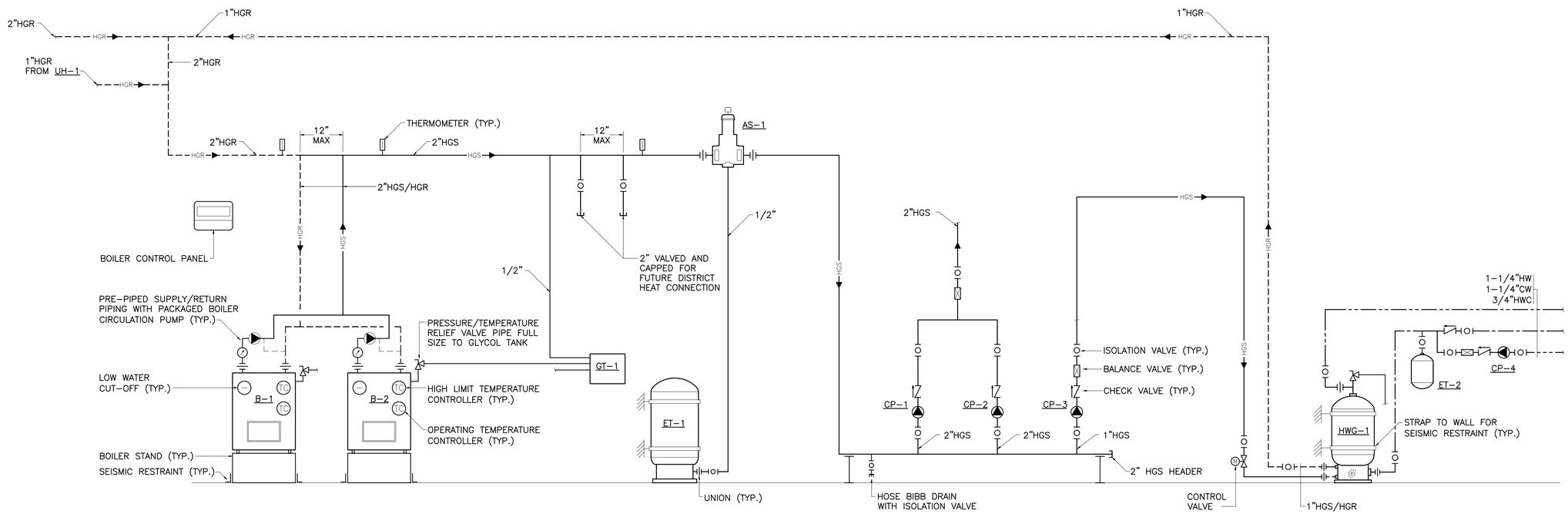

1 M4.1 BOILER PIPING DIAGRAM

SCALE: NONE

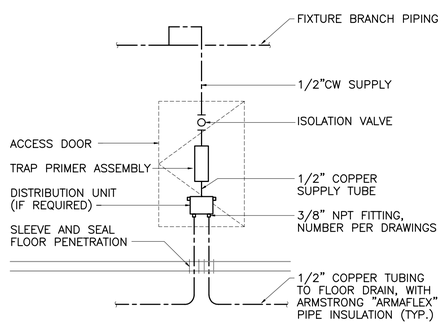

2 M4.1 TRAP PRIMER DETAIL

SCALE: NONE

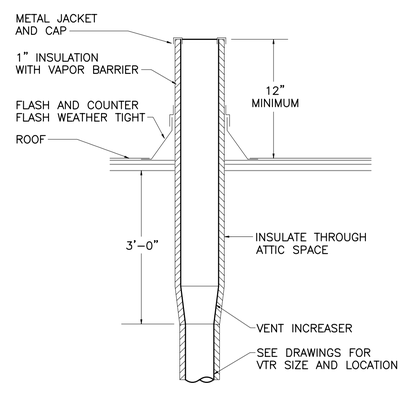

3 M4.1 VENT THROUGH ROOF DETAIL

SCALE: NONE

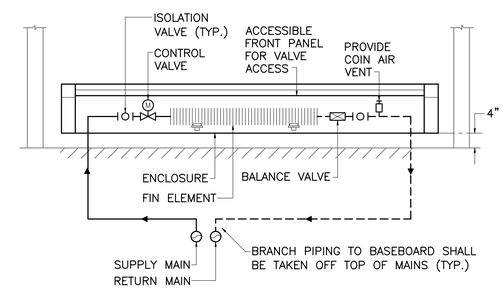

4 M4.1 BASEBOARD DETAIL

SCALE: NONE

DATE	REVISIONS	INIT.

STATE OF ALASKA
ALEC C. THOMSON
ME-8694
04/20/09
REGISTERED PROFESSIONAL ENGINEER

ALASKA NATIVE TRIBAL HEALTH CONSORTIUM

DIVISION OF ENVIRONMENTAL HEALTH AND ENGINEERING
1901 SOUTH BRAGAW STREET, SUITE 200
ANCHORAGE, ALASKA, 99508-3440
(907) 729-3600

McGRATH SUB-REGIONAL HEALTH CENTER
MECHANICAL DIAGRAMS AND DETAILS

FILE NAME: 08167-M61
LAYOUT NAME: LAYOUT1
PROJ ENG: ALEC C. THOMSON, P.E.

DATE: 04/20/09
SCALE: AS NOTED
DRAWN BY: TCH

SHEET
M4.1
7 OF 8M

DENALI COMMISSION ALASKA

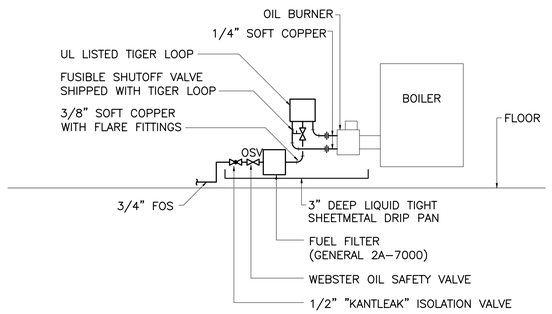

NOTE: TIGER LOOP TO BE SUPPORTED OFF THE EQUIPMENT OR BURNER ASSEMBLY AND NOT OFF PIPING.

1 / M5.1 FUEL OIL PIPING DIAGRAM

SCALE: NONE

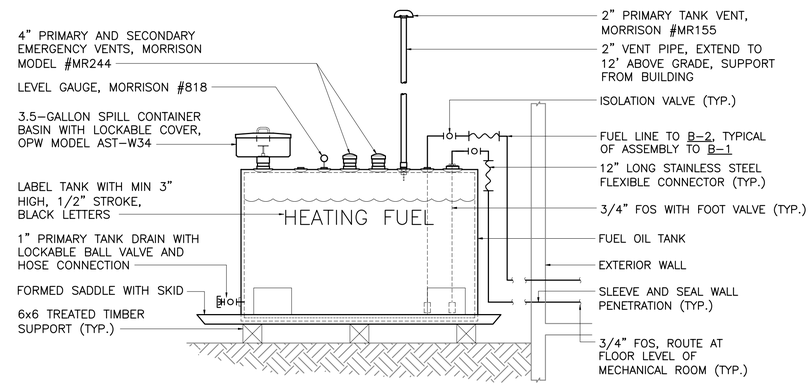

2 / M5.1 FUEL TANK DETAIL

SCALE: NONE

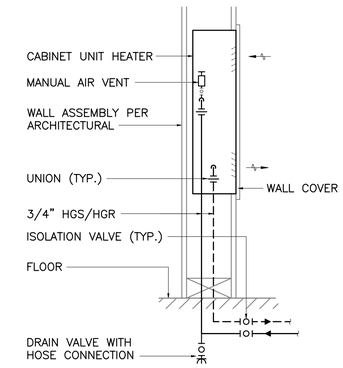

3 / M5.1 CABINET UNIT HEATER DETAIL

SCALE: NONE

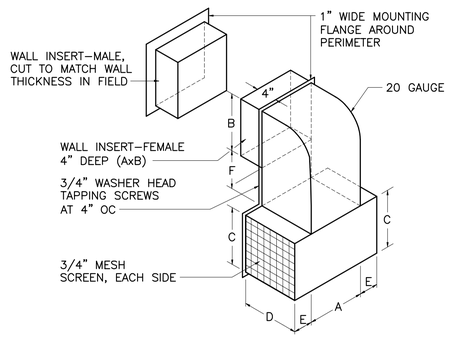

LOCATION	SERVICE	A	B	C	D	E	F
GABLE END	HRV INTAKE	14"	8"	7"	8"	6"	8"
GABLE END	HRV EXHAUST	14"	8"	N/A*	8"	N/A*	8"

* ARCTIC TEE NOT REQUIRED, TERMINATE WITH DOWN DISCHARGE

4 / M5.1 HEAT RECOVERY VENTILATION HOOD DETAIL

SCALE: NONE

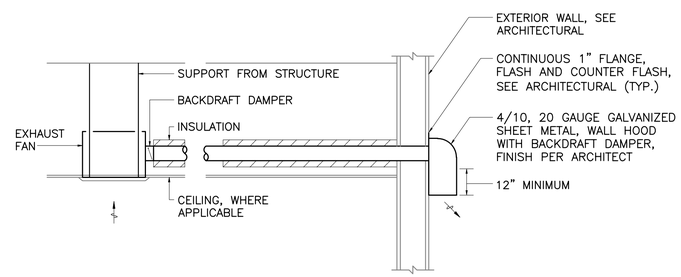

5 / M5.1 EXHAUST FAN DETAIL

SCALE: NONE

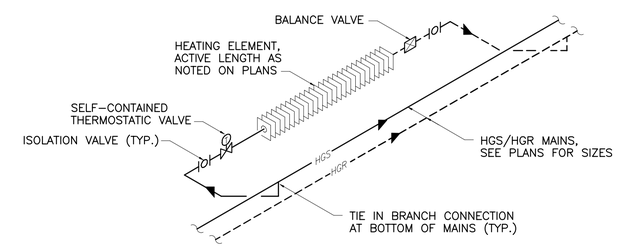

6 / M5.1 BARE FINTUBE DETAIL

SCALE: NONE

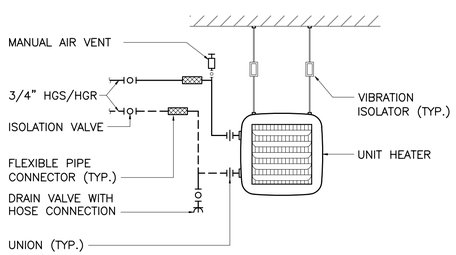

7 / M5.1 UNIT HEATER DETAIL

SCALE: NONE

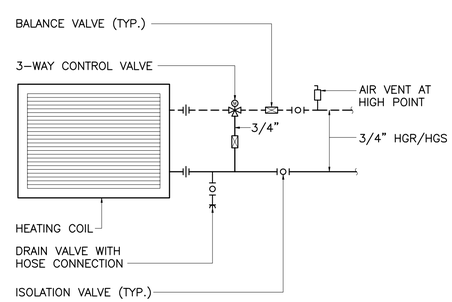

8 / M5.1 DUCT COIL DETAIL

SCALE: NONE

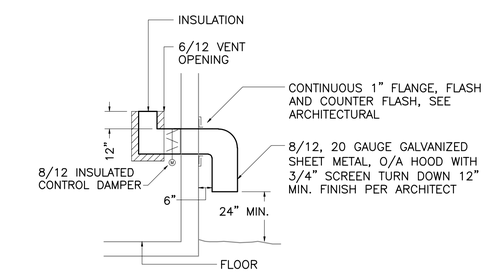

9 / M5.1 VENTILATION AIR DUCT DETAIL

SCALE: NONE

INIT.	REVISIONS	DATE

STATE OF ALASKA ALEC C. THOMSON ME-8694 04/20/09 REGISTERED PROFESSIONAL ENGINEER

ALASKA NATIVE TRIBAL HEALTH CONSORTIUM

DIVISION OF ENVIRONMENTAL HEALTH AND ENGINEERING
1901 SOUTH BRAGAW STREET, SUITE 200
ANCHORAGE, ALASKA, 99508-3440
(907) 729-3600

McGRATH SUB-REGIONAL HEALTH CENTER
MECHANICAL DETAILS

FILE NAME: 08167-M71
LAYOUT NAME: LAYOUT1
PROJ ENG: ALEC C. THOMSON, P.E.

DATE: 04/20/09
SCALE: AS NOTED
DRAWN BY: TCH

SHEET M5.1

8 OF 8M

DENALI COMMISSION ALASKA

ELECTRICAL SYMBOLS LEGEND

	LIGHT FIXTURE – SURFACE WALL MOUNTED		PANEL
	LIGHT FIXTURE – SURFACE MOUNTED		DUPLEX RECEPTACLE
	FLUORESCENT FIXTURE – RECESS MOUNTED 2'x4'		GROUND FAULT CURRENT INTERRUPTER RECEPTACLE
	FLUORESCENT FIXTURE – SURFACE MOUNTED 1'x4'		QUADRAPLEX RECEPTACLE
	FLUORESCENT FIXTURE – RECESS MOUNTED 1'x4'	11	# INDICATES SUPPLY BRANCH CIRCUIT
	FLUORESCENT FIXTURE – RECESS MOUNTED 2'x2'		SPECIAL PURPOSE RECEPTACLE
	FIXTURE WITH EMERGENCY BATTERY BACK–UP SEE NOTE 4 ON LIGHTING PLANS		DUPLEX RECEPTACLE–SWITCHED
			JUNCTION BOX
	LIGHT FIXTURE – SURFACE MOUNTED		FLOOR MOUNTED DEVICE (DUPLEX REC. SHOWN)
	LIGHT FIXTURE – WALL MOUNTED		DISCONNECT SWITCH
	FLUORESCENT STRIP FIXTURE – SURFACE MOUNTED		FUSED DISCONNECT SWITCH
	FLUORESCENT FIXTURE – SURFACE MOUNTED 4'		COMBINATION MOTOR STARTER DISCONNECT
	EXIT LIGHT – CEILING MOUNTED	$F	FRACTIONAL HP MOTOR SWITCH
	EXIT LIGHT – WALL MOUNTED		MOTOR
$	SINGLE POLE SWITCH		TELECOMMUNICATION OUTLET
$a	LOWER CASE LETTER INDICATES SWITCHING CONTROL	S	FA SMOKE DETECTOR
$3 $4	THREE WAY SWITCH AND FOUR WAY SWITCH	135°F	FA HEAT DETECTOR (FIXED TEMP. NOTED)
$OS	OCCUPANCY SENSOR SWITCH		FA HORN STROBE
$P	PILOT LIGHT SWITCH		FA MANUAL PULL STATION
$L	LIGHTED TOGGLE SWITCH		BELL
$SC	SPEED CONTROL SWITCH PROVIDED BY MECHANICAL		STROBE
$TMR	TIMER SWITCH	KP	KEY PAD
	CONDUIT, CONCEALED	NL	NIGHT LIGHT
#10	NUMBER AND SIZE OF WIRES (NO SLASHES = 3#12)	GF	GROUND FAULT CIRCUIT INTERRUPTER
A–2	HOMERUN TO PANEL (PANEL AND CIRCUIT No.)	EM	FIXTURE WITH EMERGENCY BATTERY BACK UP
	SELF–CONTAINED EMERGENCY LIGHT	X	NOTE TAG (No. INDICATES NOTE)
R	REMOTE HEAD ASSOCIATED W/ EMERGENCY LIGHT	X	FIXTURE IDENTIFICATION (LETTER INDICATES TYPE)
GEN	INDICATES FIXTURE OR DEVICE CONNECTED TO GENERATOR STANDBY PANEL M	TV	TELEVISION OUTLET
		ID	SECURITY SYSTEM INTRUSION DETECTOR
AC	ABOVE COUNTER – REFERENCE MOUNTING HEIGHT SCHEDULE ON THIS SHEET	FS	FIRE SMOKE DAMPER
		TP	TEMPERATURE PROBE
CLG	CEILING MOUNTED	CO	CARBON DIOXIDE DETECTOR
WP	WEATHERPROOF		
FACP	FIRE ALARM CONTROL PANEL		

LIGHTING FIXTURE SCHEDULE

TYPE	MANUFACTURER AND MODEL NUMBER	DESCRIPTION	LAMP TYPE	LAMP QUANTITY	MOUNTING TYPE	MOUNTING HEIGHT
A2	LITHONIA #2SP G 2 32 A12125 120 GEB10 W/ BODINE B50ST	2X4 SPECIFICATION GRADE STATIC TROFFER WITH ACRYLIC LENS. PROVIDE WITH EMERGENCY BATTERY WHERE INDICATED ON THE DRAWINGS.	F25T8	2	RECESSED	CEILING
A3	LITHONIA #2SP G 3 32 A12125 120 GEB10 W/ BODINE B50ST	2X4 SPECIFICATION GRADE TROFFER WITH ACRYLIC LENS WITH 1–2 LAMP BALLAST AND 1–1 LAMP BALLAST. PROVIDE WITH EMERGENCY BATTERY WHERE INDICATED ON THE DRAWINGS.	F25T8	3	RECESSED	CEILING
B3	LITHONIA #2SRT–G332–FW–A12125V–120–GEB10–RIF1 W/ BODINE B50ST	2X4 SPECIFICATION GRADE SEALED TROFFER WITH ACRYLIC LENS WITH 1–2 LAMP BALLAST AND 1–1 LAMP BALLAST. PROVIDE WITH EMERGENCY BATTERY WHERE INDICATED ON THE DRAWINGS.	F25T8	3	RECESSED	CEILING
C2	LITHONIA #AW 2 32 AR 120 GEB10 W/ BODINE B50ST	1X4 WRAPAROUND STYLE FLUORESCENT FIXTURE WITH ACRYLIC LENS. PROVIDE WITH EMERGENCY BATTERY WHERE INDICATED ON THE DRAWINGS.	F25T8	2	SURFACE	CEILING
E	DAYBRITE #VIS–150–12–X–G	INCANDESCENT VAPOLET FIXTURE WITH GLASS GLOBE, GUARD & MOUNTING AS SUITABLE FOR CRAWLSPACE AND ATTIC LOCATION	100W	1	SURFACE	CRAWLSPACE AND ATTIC
F	LITHONIA #TWL 35S PE LPI	HIGH PRESSURE SODIUM WALL PACK STYLE AREA LIGHT WITH INTEGRAL PHOTOCELL AND –20°F BALLAST	35W HPS	1	SURFACE	SEE ARCH. ELEVATIONS
G	LITHONIA #TWP 150S PE1 LP1	HIGH PRESSURE SODIUM WALL PACK STYLE AREA FLOOD LIGHT WITH INTEGRAL PHOTOCELL AND –20°F BALLAST	150W HPS	1	SURFACE	SEE ARCH. ELEVATIONS
	LITHONIA #LQM S W 3 R 120 EL N	EMERGENCY EXIT LED RED. PROVIDE WITH MOUNTING AND QUANTITY OF DIRECTIONAL ARROWS AS SHOWN ON DRAWINGS.	LED		CENTER	ABOVE DOOR
R	LITHONIA #ELA T NX H1206	PAR 36 SEALED AND GASKETED 6V EMERGENCY EXTERIOR FLOODLIGHT W/ TWIN HEAD & WET LOCATION LISTING	12W 6V	2	SURFACE	WALL 7'–6" COORD. W/ ARCH. FOR LOCATION
	LITHONIA #ELM654–RO	SELF CONTAINED EMERGENCY LIGHTING UNIT WITH MAINTENANCE FREE LEAD CALCIUM BATTERY, WITHOUT LAMP HEADS, 54W (6V) OUTPUT, FOR CONNECTION TO REMOTE HEADS		–	WALL	WALL 7'–6"
	LITHONIA #ELM654	SELF CONTAINED EMERGENCY LIGHT WITH MAINTENANCE FREE LEAD CALCIUM BATTERY, 9W ADJUSTABLE HEADS, AND 54 WATT, 6V OUTPUT FOR CONNECTION TO REMOTE HEADS.	9W 6V	2	WALL	WALL 7'–6"

NOTE:

1) CATALOG NUMBERS ARE FOR GENERAL REFERENCE AND ARE NOT INCLUSIVE OF ALL OPTIONS OR REQUIREMENTS DENOTED ON PLANS AND SPECIFICATIONS.

2) ALL LIGHT FIXTURE LOCATIONS ARE DIAGRAMMATIC IN NATURE, REFER TO ARCHITECTURAL REFLECTED CEILING PLAN FOR EXACT LOCATIONS.

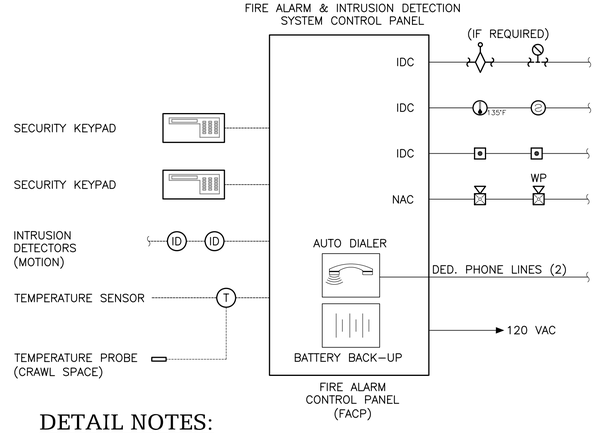

DETAIL NOTES:

1. REFERENCE DRAWINGS AND SPECIFICATIONS FOR PROPOSED QUANTITY AND LOCATION OF DEVICES AND ADDITIONAL REQUIREMENTS. PROVIDE NUMBER OF INITIATING (IDC), NOTIFICATION (NAC) AND SUPERVISORY (SC) LOOPS AS REQUIRED. CONTRACTOR IS RESPONSIBLE FOR PROVIDING COMPLETE FIRE ALARM DESIGN IN COMPLIANCE WITH GOVERNING CODES INCLUDING ANY NECESSARY DEVICES AND DETECTORS NOT SHOWN IN THESE DRAWINGS SUCH AS DOOR HOLDOPENS, DETECTORS IN CRAWLSPACE, ATTIC OR ABOVE CEILING SPACES.
2. INSTALL TEMPERATURE SENSOR CONTROLLER IN MECHANICAL ROOM AND CONNECT ALARM CONTACTS TO FIRE ALARM PANEL FOR DIAL OUT ANNUNCIATION OF LOW TEMPERATURE CONDITION. FIELD LOCATE SENSING BULBS IN CRAWLSPACE.
3. PROVIDE ALL NECESSARY AUXILIARY CONTACTS, CONNECTIONS, ETC. TO PROVIDE A COMPLETE SYSTEM.

1 / E1.1 FIRE ALARM/SECURITY SYSTEM RISER DIAGRAM

SCALE: NTS

MOUNTING HEIGHT SCHEDULE

PANELBOARDS (TOP)	70"
SPECIAL SYSTEM PANELS (TOP)	66"
POWER METER BASE (CENTER LINE OF SOCKET)	66"
CONTACTORS, MOTOR STARTERS, DISCONNECT SWITCHES (TOP)	66"
RECEPTACLES (UNLESS OTHERWISE NOTED)	18"
ABOVE COUNTER DEVICES (DENOTED "AC")	SEE NOTES
WALL MOUNTED SWITCHES	46"
TELECOMMUNICATION OUTLETS (UNLESS OTHERWISE NOTED)	18"
HORNS/STROBES/HORN STROBES	80" TO BOTTOM
PULL STATIONS, PUSH BUTTONS	46"

NOTES:
COORDINATE AND INSTALL ALL EQUIPMENT AND DEVICES WITH THE ARCHITECTURAL PLANS AND ANY SPECIFICALLY DENOTED REQUIREMENTS.

MOUNTED HEIGHTS SHALL PREVAIL UNLESS OTHERWISE NOTED OR FIELD CONDITIONS REQUIRE DEVIATION.

MOUNTING HEIGHTS ARE FROM FINISHED FLOOR TO THE CENTERLINE OF THE DEVICE UNLESS OTHERWISE NOTED.

COORDINATE MOUNTING HEIGHTS AND LOCATIONS OF OUTLETS DENOTED AS ABOVE COUNTER TO BE INSTALLED 6" ABOVE COUNTERS OR BACKSPLASHES, WHICHEVER IS HIGHER. "AC"

COORDINATE AND INSTALL ALL EQUIPMENT AND DEVICES RELATED TO DENTAL, PER DENTAL PLANS.

DENALI COMMISSION ALASKA

DATE	REVISIONS	INIT.

STATE OF ALASKA 16429 BRETT BINGHAM REGISTERED PROFESSIONAL ENGINEER

ALASKA NATIVE TRIBAL HEALTH CONSORTIUM

DIVISION OF ENVIRONMENTAL HEALTH AND ENGINEERING
1901 SOUTH BRAGAW STREET, SUITE 200
ANCHORAGE, ALASKA, 99508–3440
(907) 729–3600

ALASKA NATIVE TRIBAL HEALTH CONSORTIUM

McGRATH SUB–REGIONAL HEALTH CENTER

LEGEND, FIXTURE SCHEDULE AND DETAILS

FILE NAME: 08167–E11
LAYOUT NAME: LAYOUT1
PROJ ENG: BRETT BINGHAM, P.E.

DATE: 04/20/09
SCALE: AS NOTED
DRAWN BY: BAB

SHEET E1.1

SHEET NOTES

1. THE CONTRACTOR SHALL COORDINATE WITH THE LOCAL TELEPHONE COMPANY (RICK WILLIAMS AT UNITED UTILITIES INCORPORATED, 1 800 478–2020) AND SHALL INSTALL TWO 2" CONDUITS WITH PULL STRING (ONE IS TO BE A SPARE) FROM MAIN TELEPHONE BACKBOARD TO THE TELEPHONE UTILITY POLE. EXACT POLE LOCATION COULD NOT BE CONFIRMED. FOR BIDDING PURPOSES CONTRACTOR SHALL ASSUME POLE LOCATION IS AS SHOWN. COORDINATE EXACT LOCATION, ROUTING AND REQUIREMENTS WITH UTILITY COMPANY.
2. PROPOSED LOCATION FOR ELECTRICAL SERVICE ENTRANCE EQUIPMENT. CONTRACTOR TO COORDINATE LOCATION AND TYPE OF UTILITY SERVICE CONNECTION WITH SERVING UTILITY, McGRATH LIGHTING AND POWER (LOUIS EGRASS 907 524–3391 OR ERNIE BAUMGARTNER 907 524–3360).
3. HEADBOLT HEATER PEDESTAL. SEE DETAIL 2/E1.2.

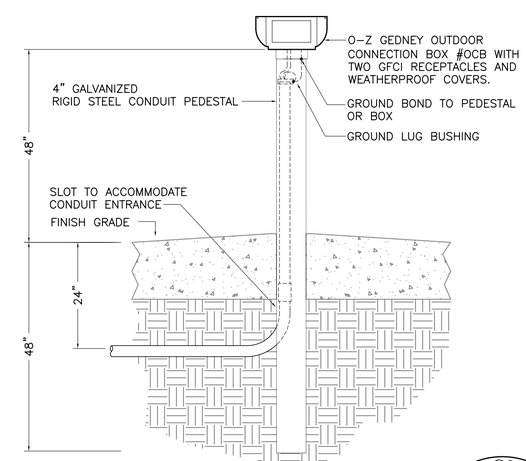

1 / E1.2 ELECTRICAL SITE PLAN

SCALE: 0 1' 5' 10' 15'

N

2 / E1.2 TYPICAL HEADBOLT HEATER OUTLET DETAIL

SCALE: 1/8" = 1'-0"

DENALI COMMISSION ALASKA

DATE	REVISIONS	INIT.

STATE OF ALASKA 49TH BRETT BINGHAM REGISTERED PROFESSIONAL ENGINEER

ALASKA NATIVE TRIBAL HEALTH CONSORTIUM

DIVISION OF ENVIRONMENTAL HEALTH AND ENGINEERING
1901 SOUTH BRAGAW STREET, SUITE 200
ANCHORAGE, ALASKA, 99508–3440
(907) 729–3600

ALASKA NATIVE TRIBAL HEALTH CONSORTIUM

McGRATH SUB–REGIONAL HEALTH CENTER
SITE PLAN

FILE NAME: 08167–E12
LAYOUT NAME: LAYOUT1
PROJ ENG: BRETT BINGHAM, P.E.

DATE: 04/20/09
SCALE: AS NOTED
DRAWN BY: BAB

SHEET E1.2

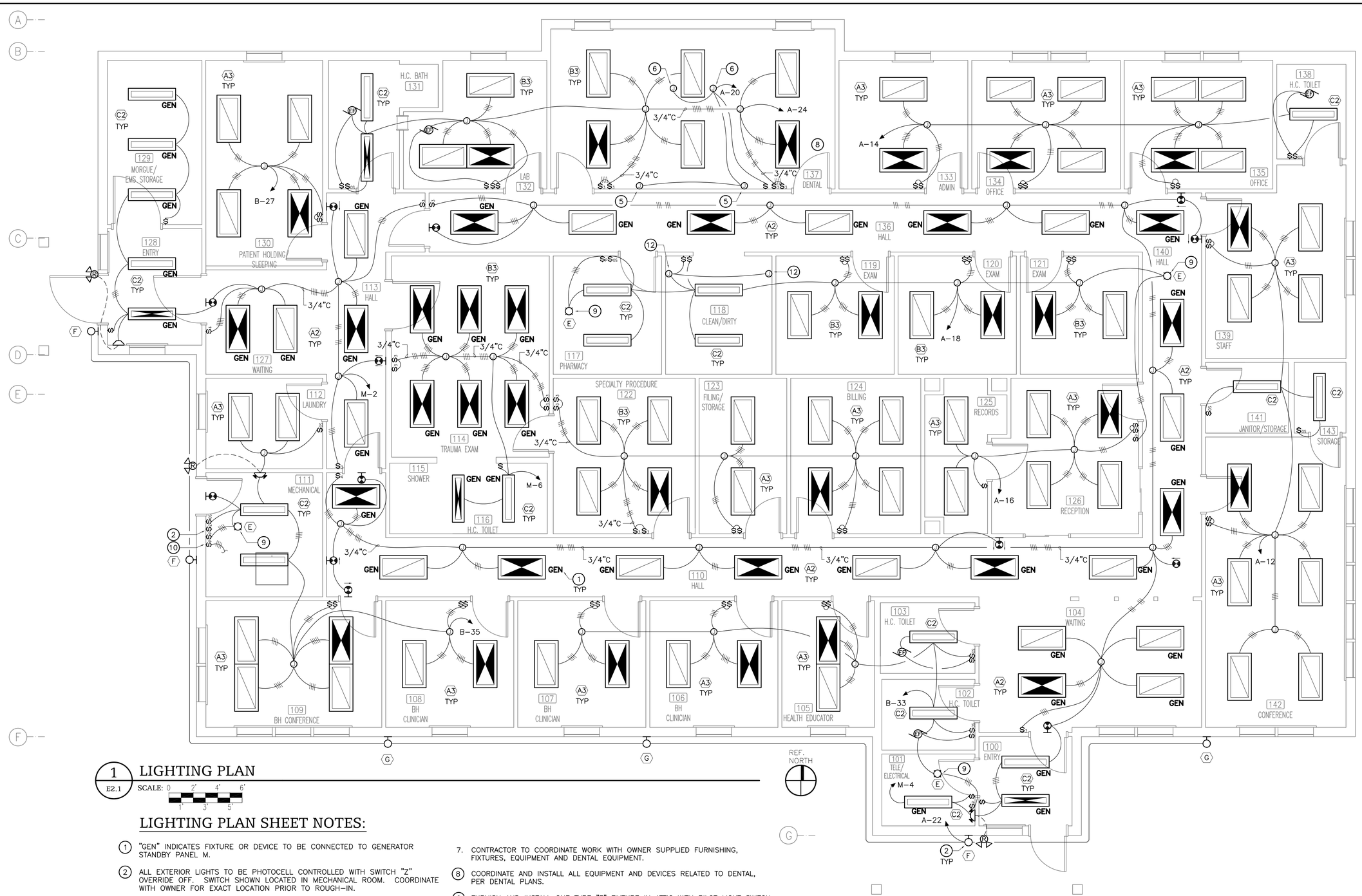

1 LIGHTING PLAN

E2.1

SCALE: 0 2' 4' 6' 1' 3' 5'

LIGHTING PLAN SHEET NOTES:

1. "GEN" INDICATES FIXTURE OR DEVICE TO BE CONNECTED TO GENERATOR STANDBY PANEL M.
2. ALL EXTERIOR LIGHTS TO BE PHOTOCELL CONTROLLED WITH SWITCH "Z" OVERRIDE OFF. SWITCH SHOWN LOCATED IN MECHANICAL ROOM. COORDINATE WITH OWNER FOR EXACT LOCATION PRIOR TO ROUGH-IN.
3. FLUORESCENT FIXTURES IN ROOMS WITH 2 SWITCHES SHALL HAVE DUAL BALLASTS AND SWITCH INBOARD/OUTBOARD LAMPS SEPARATELY.
4. EMERGENCY LIGHT FIXTURES: DENOTES FIXTURE IS EQUIPPED WITH A BODINE B50 EMERGENCY BATTERY BALLAST CONNECTED TO THE LOCAL LIGHTING CIRCUIT AHEAD OF ANY SWITCHES. THE FIXTURE IS SWITCHED WITH THE LOCAL LIGHTING CIRCUIT AND ONLY OVERRIDES THE SWITCH UPON POWER FAILURE.
5. JUNCTION BOX FOR CONNECTION TO RECESSED X-RAY VIEWER (120V).
6. DENTAL OPERATING LIGHT. (120V) PROVIDE BACKING PER MANUFACTURER. FIELD ADJUST "B3" FIXTURES FOR PROPER CLEARANCES.
7. CONTRACTOR TO COORDINATE WORK WITH OWNER SUPPLIED FURNISHING, FIXTURES, EQUIPMENT AND DENTAL EQUIPMENT.
8. COORDINATE AND INSTALL ALL EQUIPMENT AND DEVICES RELATED TO DENTAL, PER DENTAL PLANS.
9. FURNISH AND INSTALL ONE TYPE "E" FIXTURE IN ATTIC WITH PILOT LIGHT SWITCH ("ON" WHEN ENERGIZED) IN ROOM BELOW OR AS OTHERWISE SHOWN LOCATED ON MAIN FLOOR.
10. PILOT LIGHT SWITCH ("ON" WHEN ENERGIZED) FOR CONNECTION TO CRAWLSPACE LIGHTING. SEE E2.2.
11. THE EXTERIOR WALL SHALL NOT BE PENETRATED AND ALL CEILING PENETRATIONS SHALL HAVE SOLID BLOCK AND WEATHER TIGHT BOXES.
12. HARDWIRE CONNECTION TO UNDERCOUNTER TASK LIGHTS SUPPLIED BY DENTAL. COORDINATE WITH AND REFERENCE DENTAL PLANS D-501 FOR LOCATIONS, HEIGHTS, AND REQUIREMENTS.

INIT.	REVISIONS	DATE

STATE OF ALASKA 49TH BRETT BINGHAM REGISTERED PROFESSIONAL ENGINEER

ALASKA NATIVE TRIBAL HEALTH CONSORTIUM

DIVISION OF ENVIRONMENTAL HEALTH AND ENGINEERING
1901 SOUTH BRAGAW STREET, SUITE 200
ANCHORAGE, ALASKA, 99508-3440
(907) 729-3600

McGRATH SUB-REGIONAL HEALTH CENTER
LIGHTING PLAN

FILE NAME: 08167-E21
LAYOUT NAME: LAYOUT1
PROJ ENG: BRETT BINGHAM, P.E.

DATE: 04/20/09
SCALE: AS NOTED
DRAWN BY: EDA

SHEET E2.1

3 OF 9E

DENALI COMMISSION ALASKA

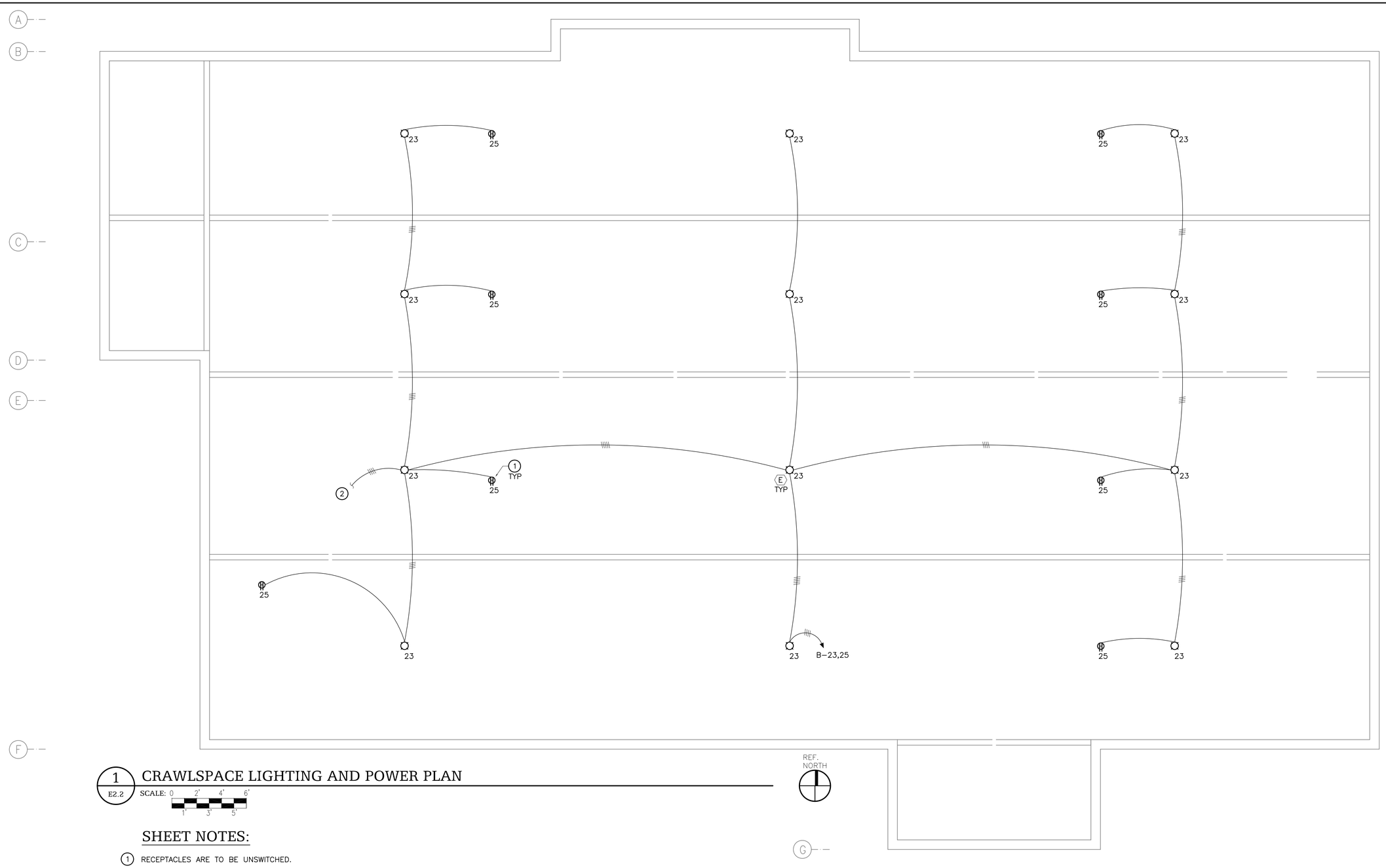

1 / E2.2 CRAWLSPACE LIGHTING AND POWER PLAN

SCALE: 0 2' 4' 6' / 1' 3' 5'

SHEET NOTES:

1. RECEPTACLES ARE TO BE UNSWITCHED.
2. CONNECT TO PILOT LIGHT SWITCH IN ROOM ABOVE FOR CONTROL OF LIGHTING.

DATE	REVISIONS	INIT.

STATE OF ALASKA 14491 BRETT BINGHAM REGISTERED PROFESSIONAL ENGINEER

ALASKA NATIVE TRIBAL HEALTH CONSORTIUM

DIVISION OF ENVIRONMENTAL HEALTH AND ENGINEERING
1901 SOUTH BRAGAW STREET, SUITE 200
ANCHORAGE, ALASKA, 99508-3440
(907) 729-3600

ALASKA NATIVE TRIBAL HEALTH CONSORTIUM

McGRATH SUB-REGIONAL HEALTH CENTER

CRAWLSPACE LIGHTING AND POWER PLAN

DATE: 04/20/09
SCALE: AS NOTED
DRAWN BY: EDA
FILE NAME: 08167-E22
LAYOUT NAME: LAYOUT1
PROJ ENG: BRETT BINGHAM, P.E.

DENALI COMMISSION ALASKA

SHEET E2.2

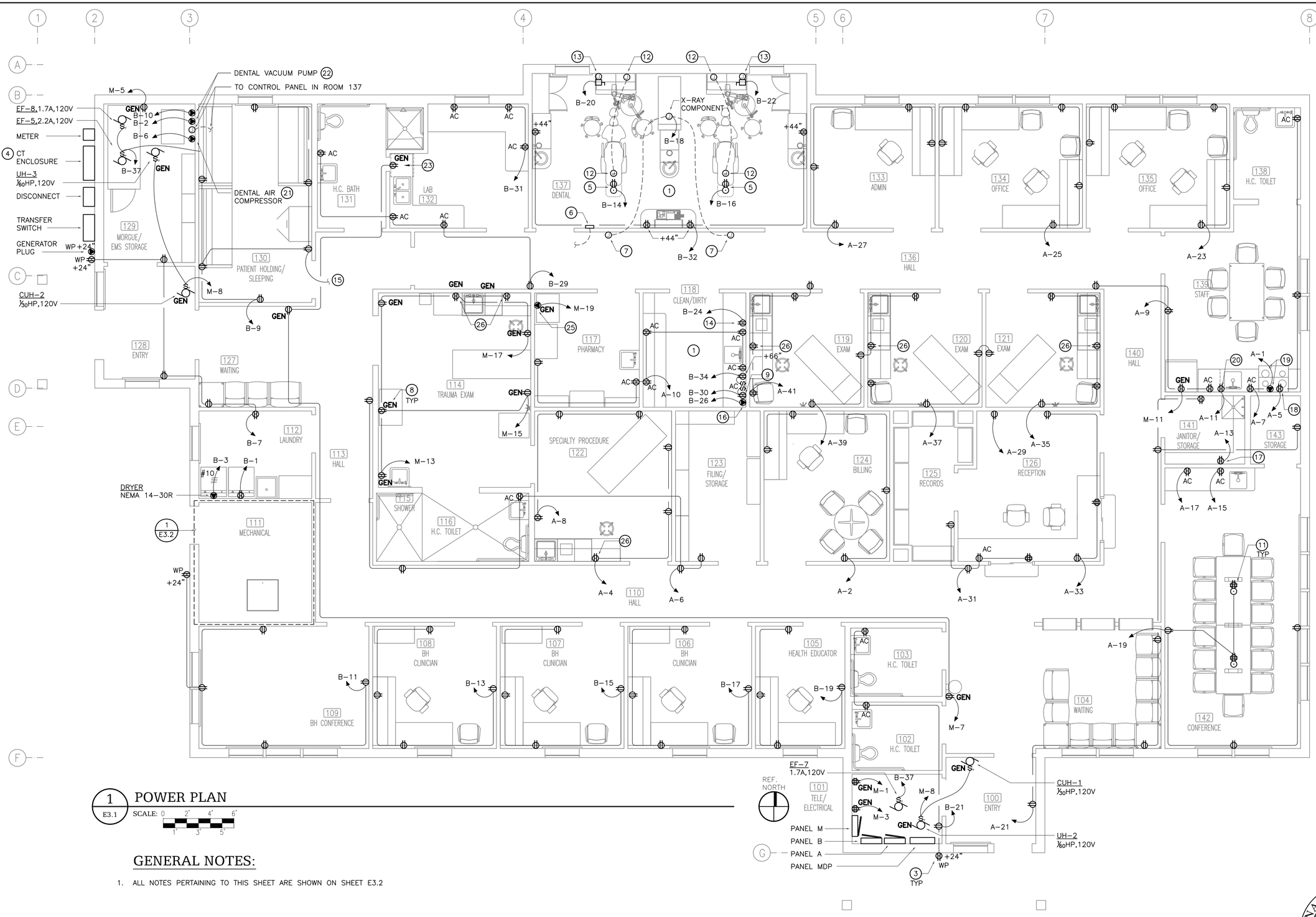

1 E3.1 POWER PLAN

SCALE: 0 2' 4' 6' 1' 3' 5'

GENERAL NOTES:

1. ALL NOTES PERTAINING TO THIS SHEET ARE SHOWN ON SHEET E3.2

INIT.	REVISIONS	DATE

STATE OF ALASKA 49th BRETT BINGHAM P.E. 12005 REGISTERED PROFESSIONAL ENGINEER

ALASKA NATIVE TRIBAL HEALTH CONSORTIUM

DIVISION OF ENVIRONMENTAL HEALTH AND ENGINEERING
1901 SOUTH BRAGAW STREET, SUITE 200
ANCHORAGE, ALASKA, 99508-3440
(907) 729-3600

McGRATH SUB-REGIONAL HEALTH CENTER
POWER PLAN

FILE NAME: 08167-E31
LAYOUT NAME: LAYOUT1
PROJ ENG: BRETT BINGHAM, P.E.

DATE: 04/20/09
SCALE: AS NOTED
DRAWN BY: EDA

SHEET E3.1

5 OF 9E

DENALI COMMISSION ALASKA

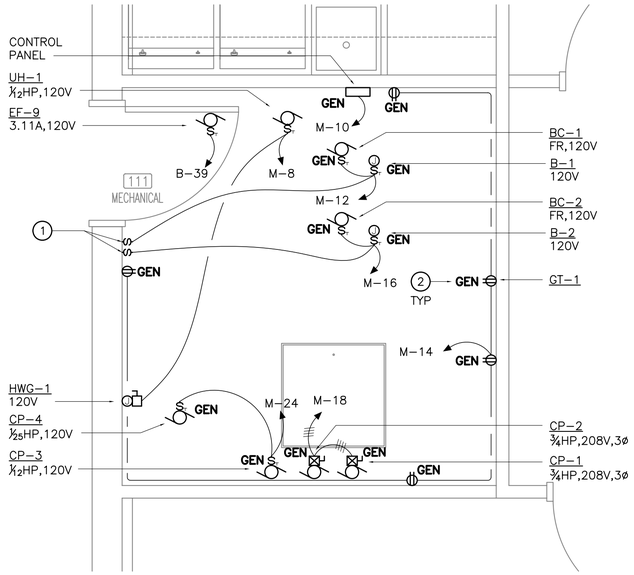

1 E3.2 POWER PLAN - ENLARGED MECHANICAL ROOM

SCALE: 01" 6" 1' 2' 3' / 3" 9"

REF. NORTH

DETAIL NOTES:

1. BOILER SHUT DOWN SWITCHES (RED) WITH COVERS. PROVIDE RED IDENTIFICATION LABEL FOR EACH SWITCH.
2. "GEN" INDICATES FIXTURE OR DEVICE TO BE CONNECTED TO GENERATOR STANDBY PANEL M.
3. COORDINATE EXACT LOCATIONS OF ELECTRICAL PANELBOARDS, DISCONNECTS, MOTOR STARTERS, ETC TO ENSURE THAT THEY HAVE NEC REQUIRED WORKING CLEARANCES.
4. THE EXTERIOR WALL SHALL NOT BE PENETRATED AND ALL CEILING PENTRATIONS SHALL HAVE SOLID BLOCK AND WEATHER TIGHT BOXES.

POWER PLAN SHEET NOTES:

THESE NOTES ARE TO BE REFERENCED ON SHEET E3.1

1. COORDINATE FINAL LOCATIONS AND REQUIREMENT OF DEVICES AND EQUIPMENT IN DENTAL 137, 129, & 118 WITH DENTAL EQUIPMENT DRAWINGS PRIOR TO ROUGH-IN.
2. COORDINATE EXACT LOCATIONS OF ELECTRICAL SERVICE ENTRANCE EQUIPMENT, PANELBOARDS, DISTRIBUTION EQUIPMENT, ETC TO ENSURE THAT THEY HAVE NEC REQUIRED WORKING CLEARANCES AS REQUIRED BY NEC 110.26.
3. PROVIDE SURFACE MOUNTED CAST OUTLET BOXES AND USE SURFACE MOUNTED CONDUIT (IMC OR LIQUID-TIGHT FLEX WHERE APPROPRIATE) FOR ALL DEVICES AND EQUIPMENT LOCATED ON THE BUILDING EXTERIOR.
4. COORDINATE LOCATION AND TYPE OF UTILITY SERVICE CONNECTION WITH SERVING UTILITY.
5. RECEPTACLE FOR CONNECTION OF DENTAL CHAIR. COORDINATE WITH EQUIPMENT MANUFACTURER FOR EXACT LOCATION (FLOOR OR WALL) AND TYPE OF RECEPTACLE REQUIRED.
6. DENTAL CONTROL PANEL AT +60" FOR REMOTE CONTROL OF COMPRESSOR AND VAC PUMP. PROVIDE LOW VOLTAGE CONTROL WIRING AS REQUIRED BY DENTAL DRAWINGS.
7. PROVIDE SINGLE GANG JUNCTION BOX FOR X-RAY CONTROL STATION AT +60". PROVIDE ½" CONDUIT AND LOW VOLTAGE CONTROL WIRING AS REQUIRED BY DENTAL DRAWINGS TO X-RAY COMPONENT IN DENTAL EXAM ROOM.
8. "GEN" INDICATES FIXTURE OR DEVICE TO BE CONNECTED TO GENERATOR STANDBY PANEL M.
9. STERILIZER UNIT – 110 VOLTS, 12 AMPS. RECEPTACLE TO BE SWITCHED. MOUNT RECEPTACLE AT +21" (VERIFY WITH DENTAL).
10. COORDINATE LOCATION AND HEIGHTS OF ALL ELECTRICAL OUTLETS MOUNTED ABOVE COUNTERS, BENCHES, AND BACKSPLASHES WITH ARCHITECTURAL ELEVATIONS AND CASEWORK SHOP DRAWINGS.
11. COORDINATE LOCATION OF FLOOR BOX WITH OWNER PRIOR TO ROUGH-IN.
12. CONDUIT (2") STUB UP PER DENTAL DRAWINGS.
13. DENTAL UNIT UTILITY CENTER, 8 AMPS 120V.
14. RECEPTACLE FOR RECESSED ULTRASONIC CLEANER. RECEPTACLE MOUNTED AT +18" (VERIFY WITH DENTAL). COORDINATE WITH DENTAL FOR PROVIDING OPTIONAL QUAD ELECTRICAL BOX FOR REMOTE TIMER AT 44" DIRECTLY ABOVE UNIT WITH 1" CONDUIT TERMINATING AT 24" ADJACENT TO DUPLEX OUTLET BELOW COUNTER.
15. CONNECT TO CARBON MONOXIDE DETECTOR JUST OUTSIDE PATIENT HOLDING DOOR, SHOWN ON E4.1.
16. STERILIZER UNIT – 220 VOLTS, 9.2 AMPS. CONTRACTOR TO COORDINATE WITH BURKHART DENTAL SUPPLY/EQUIPMENT MANUFACTURER FOR THE PROVIDING AND INSTALLING OF A BUCK N BOOST TRANSFORMER TO BOOST VOLTAGE AS NEEDED. MOUNT RECEPTACLE AT +46" (VERIFY WITH DENTAL).
17. HRV-1, 610W, 120V. COORDINATE WITH MECHANICAL FOR EXACT LOCATION AND HEIGHT OF RECEPTACLE.
18. MICROWAVE ABOVE RANGE. COORDINATE WITH ARCHITECTURAL AND EQUIPMENT MANUFACTURER FOR EXACT LOCATION OF RECEPTACLE.
19. RANGE, NEMA 14-50R, 3#6, 1#10 CU. MOUNT RECEPTACLE IN LOCATION SO THAT IT IS ACCESSIBLE FROM THE FRONT OF THE RANGE BY REMOVAL OF THE RANGE DRAWER IN COMPLIANCE WITH NEC 422.33(B).
20. DISHWASHER, MOUNT RECEPTACLE AT +18" A.F.F.
21. AIR COMPRESSOR – 208/230 VOLTS, 8 AMPS, MINIMUM VOLTAGE IS 200 VOLTS. ELECTRICIAN IS TO VERIFY THE VOLTAGE LEVEL AT EQUIPMENT AND COORDINATE WITH BURKHART DENTAL SUPPLY/EQUIPMENT MANUFACTURER FOR THE PROVIDING AND INSTALLING OF A BUCK N BOOST TRANSFORMER TO BOOST VOLTAGE IF NEEDED. COORDINATE RECEPTACLE TYPE WITH EQUIPMENT MANUFACTURER.
22. VACUUM PUMP UNIT – TWO UNITS EACH 208/230 VOLTS, 13 AMPS, MINIMUM VOLTAGE IS 200 VOLTS. ELECTRICIAN IS TO VERIFY THE VOLTAGE LEVEL AT EQUIPMENT AND COORDINATE WITH BURKHART DENTAL SUPPLY/EQUIPMENT MANUFACTURER FOR THE PROVIDING AND INSTALLING OF A BUCK N BOOST TRANSFORMER TO BOOST VOLTAGE IF NEEDED. COORDINATE RECEPTACLE TYPE WITH EQUIPMENT MANUFACTURER.
23. RECEPTACLE FOR UNDERCOUNTER REFRIGERATOR. COORDINATE WITH ARCHITECTURAL AND EQUIPMENT INFORMATION FOR EXACT LOCATION OF RECEPTACLE PRIOR TO ROUGH-IN.
24. THE EXTERIOR WALL SHALL NOT BE PENETRATED AND ALL CEILING PENETRATIONS SHALL HAVE SOLID BLOCK AND WEATHER TIGHT BOXES.
25. REFRIGERATOR, 208/230 VOLTS, SINGLE PHASE, 4.5A.
26. COORDINATE EXACT HEIGHTS AND LOCATIONS OF DEVICES WITH OWNER AND FURNITURE/CASEWORK MANUFACTURER PRIOR TO ROUGH-IN.

DENALI COMMISSION ALASKA

DATE	REVISIONS	INIT.

STATE OF ALASKA 24 OH BRETT BINGHAM REGISTERED PROFESSIONAL ENGINEER

ALASKA NATIVE TRIBAL HEALTH CONSORTIUM

DIVISION OF ENVIRONMENTAL HEALTH AND ENGINEERING
1901 SOUTH BRAGAW STREET, SUITE 200
ANCHORAGE, ALASKA, 99508-3440
(907) 729-3600

McGRATH SUB-REGIONAL HEALTH CENTER
POWER PLAN – ENLARGED MECHANICAL ROOM

DATE: 04/20/09
SCALE: AS NOTED
DRAWN BY: EDA
FILE NAME: 08167-E32
LAYOUT NAME: LAYOUT1
PROJ ENG: BRETT BINGHAM, P.E.

SHEET E3.2

PANEL A SCHEDULE

225A MLO

120/208V,3PH,4W

CKT	AMP	POLE	LOAD DESCRIPTION	PHASE A VA	PHASE B VA	PHASE C VA	LOAD DESCRIPTION	POLE	AMP	CKT
1	50		REC-RANGE STAFF 139	4,000 720			REC-BILLING 124	1	20	2
3		2			4,000 540		REC-SPEC. PROC 122	1	20	4
5	20	1	REC-MICROWAVE STAFF 139			1,800 900	REC-FILE 123,HALL 110,113,TLT	1	20	6
7	20	1	REC-139 CNTR (E) & E WALL, 13	540 540			REC-SPEC. PROC 122	1	20	8
9	20	1	REC-139 CNTR (W) & W WALL, 1		540 1,080		REC-CLN/DRTY 118, PHRMCY 11	1	20	10
11	20	1	REC-STAFF 139 DISHWASHER			1,200 1,355	LTG-CONF,JAN,STAFF	1	20	12
13	20	1	REC-HRV (JAN 141)	610 1,215			LTG-ADMIN, OFF 134,135, TLT	1	20	14
15	20	1	REC-CONF 142 COUNTER		180 1,715		LTG-RCPTN,BILL,RCRDS,FLNG	1	20	16
17	20	1	REC-CONF 142 COUNTER			180 1,455	LTG-EXAM,CLN/DRTY,PHRMCY	1	20	18
19	20	1	REC-CONF 142 WALLS, FLOOR	1,260 1,120			DENTAL EXAM LT, XRAY VIEWE	1	20	20
21	20	1	REC-STOR,JAN,HALL,WTG,ENTR		1,080 940		LTG-EXTERIOR BUILDING	1	20	22
23	20	1	REC-OFFICE 135			900 1,255	LTG-DENTAL, LAB, HC BATH	1	20	24
25	20	1	REC-OFFICE 134	900 1,500			REC-HEADBOLT HEATER		20	26
27	20	1	REC-OFFICE 133		720 1,500		REC-HEADBOLT HEATER	2		28
29	20	1	REC-RECEPTION COPIER			1,200 1,500	REC-HEADBOLT HEATER		20	30
31	20	1	REC-RECEPTION 126	900 1,500			REC-HEADBOLT HEATER	2		32
33	20	1	REC-RECEPTION 126		720 1,500		REC-HEADBOLT HEATER		20	34
35	20	1	REC-EXAM 120, 121			720 1,500	REC-HEADBOLT HEATER	2		36
37	20	1	REC-EXAM 120	720			SPARE	1	20	38
39	20	1	REC-EXAM 119, 120		720		SPARE	1	20	40
41	20	1	REC-EXAM 119			720	SPARE	1	20	42
CONNECTED LOAD (VA)				15,525	15,235	14,685	45,445 VA			
CONNECTED LOAD (AMPERES)				129	127	122	126 A			
DEMAND LOAD (VA)				16,109	15,899	15,701	47,709 VA			
DEMAND LOAD (AMPERES)				134	132	131	133 A			
AMPERE INTERRUPT RATING							AS INDICATED BY THE FAULT CURRENT ANALYSIS			

PANEL B SCHEDULE

225A MLO

120/208V,3PH,4W

	CKT	AMP	POLE	LOAD DESCRIPTION	PHASE A VA	PHASE B VA	PHASE C VA	LOAD DESCRIPTION	POLE	AMP	CKT
	1	20	1	WASHER	1,500 1,560			DENTAL VACUUM		20	2
	3	30		DRYER		2,500 1,560			2		4
	5		2				2,500 960	DENTAL COMPRESSOR		20	6
	7	20	1	REC-LNDRY,WTG,ENTRY,MRG	900 960				2		8
A	9	20	1	REC-PATIENT HLDG,CO DTCTR		1,260 1,560		DENTAL VACUUM		20	10
	11	20	1	REC-BH CONF 109			900 1,560		2		12
	13	20	1	REC-CLINICIAN 108	720 960			REC-DENTAL CHAIR	1	20	14
	15	20	1	REC-CLINICIAN 107		720 960		REC-DENTAL CHAIR	1	20	16
	17	20	1	REC-CLINICIAN 106			720 960	DENTAL X-RAY	1	20	18
	19	20	1	REC-HEALTH EDUCATOR 105	720 960			DENTAL UTILITY	1	20	20
	21	20	1	REC-TLTS, ELEC, EXTERIOR		720 960		DENTAL UTILITY	1	20	22
	23	20		LTG-CRAWLSPACE			1,200 720	REC-ULTRASONIC CLNR (118)	1	20	24
	25		2	REC-CRAWLSPACE	1,440 1,105			REC-STERILIZER		20	26
A	27	20	1	LTG-PATIENT HOLDING		430 1,105			2		28
	29	20	1	REC-LAB CNTR,HC BATH,HALL			720 1,440	REC-STERILIZER	1	20	30
	31	20	1	REC-LAB COUNTER	540 720			REC-DENTAL CABINETS	1	20	32
	33	20	1	LTG-BH CLINIC,TLT, HLTH ED		1,080 180		REC-CLEAN/DIRTY (DISTILLER)	1	20	34
	35	20	1	LTG-BH CLINIC, CONF,MECH LNDRY			1,140 1,500	REC-HEADBOLT HEATER		20	36
	37	20	1	EF-5,8,7	675 1,500			REC-HEADBOLT HEATER	2		38
	39	20	1	EF-9		375		SPARE	1	20	40
	41	20	1	SPARE				SPARE	1	20	42
CONNECTED LOAD (VA)					14,260	13,410	14,320	41,990 VA			
CONNECTED LOAD (AMPERES)					119	112	119	117 A			
DEMAND LOAD (VA)					14,650	14,178	15,145	43,973 VA			
DEMAND LOAD (AMPERES)					122	118	126	122 A			
AMPERE INTERRUPT RATING								AS INDICATED BY THE FAULT CURRENT ANALYSIS			

A - ARC-FAULT TYPE CIRCUIT BREAKER.

PANEL M SCHEDULE

225A MLO

120/208V,3PH,4W

	CKT	AMP	POLE	LOAD DESCRIPTION	PHASE A VA	PHASE B VA	PHASE C VA	LOAD DESCRIPTION	POLE	AMP	CKT
	1	20	1	REC-DATA ROOM	360 660			LTG-MORG,ENTRY,WTG,HALL	1	20	2
	3	20	1	REC-DATA ROOM		360 1,650		LTG-ELEC,ENTRY,WTG,HALLS	1	20	4
	5	20	1	REC-MORGUE129 FRIDGE			1,440 778	LTG-TRAUMA	1	20	6
	7	15	1	REC-WTG 104, WTG 127, 132 FR	840 1,200			CUH-1 & 2, UH-1 & 2 & 3, HWG-1	1	20	8
L	9	20	1	FIRE ALARM CONTROL PANEL		500 500		MECH RM CONTROL PANEL	1	20	10
	11	20	1	REC-STAFF 139 FRIDGE			1,000 500	B-1, BC-1	1	20	12
	13	20	1	REC-TRAUMA EXAM 114	540 900			REC-MECH RM, GT-1	1	20	14
	15	20	1	REC-TRAUMA EXAM 114		360 500		B-2, BC-2	1	20	16
	17	20	1	REC-TRAUMA EXAM 114			360 890	CP-1, CP-2		20	18
	19	15		PHARMACY FRIDGE	470 890						20
	21		2			470 890			3		22
	23	20	1	SPARE			500	CP-3, CP-4	1	20	24
	25	20	1	SPARE				SPARE	1	20	26
	27	20	1	SPARE				SPARE	1	20	28
	29	20	1	SPARE				SPARE	1	20	30
	31	20	1	SPARE				SPARE	1	20	32
	33	20	1	SPARE				SPARE	1	20	34
	35	20	1	SPARE				SPARE	1	20	36
	37	-	1	SPACE				SPACE	1	-	38
	39	-	1	SPACE				SPACE	1	-	40
	41	-	1	SPACE				SPACE	1	-	42
CONNECTED LOAD (VA)					5,860	5,230	5,468	16,558 VA			
CONNECTED LOAD (AMPERES)					49	44	46	46 A			
DEMAND LOAD (VA)					6,136	5,754	5,774	17,664 VA			
DEMAND LOAD (AMPERES)					51	48	48	49 A			
AMPERE INTERRUPT RATING								AS INDICATED BY THE FAULT CURRENT ANALYSIS			

L - PROVIDE WITH LOCK-ON TYPE DEVICE.

MDP

120/208V,3PH,4W 400A

CKT	* AMP	POLE	LOAD DESCRIPTION	PHASE A VA	PHASE B VA	PHASE C VA	LOAD DESCRIPTION	POLE	* AMP	CKT
1			PANEL A	16,109 6,136			PANEL M			2
					15,899 5,754					
		3				15,701 5,774		3		
3	*		PANEL B	14,650			SPACE			4
					14,178					
		3				15,145		3		
5			SPACE				SPACE			6
		3						3		
7			SPACE				SPACE			8
		3						3		
9			SPACE				SPACE			10
		3						3		
CONNECTED LOAD (VA)				36,895	35,830	36,620	109,345 VA			
CONNECTED LOAD (AMPERES)				307	299	305	304 A			
DEMAND LOAD (VA)				36,895	35,830	36,620	109,345 VA			
DEMAND LOAD (AMPERES)				307	299	305	304 A			
AMPERE INTERRUPT RATING										

* SEE SINGLE LINE DIAGRAM FOR CIRCUIT BREAKER SIZES.

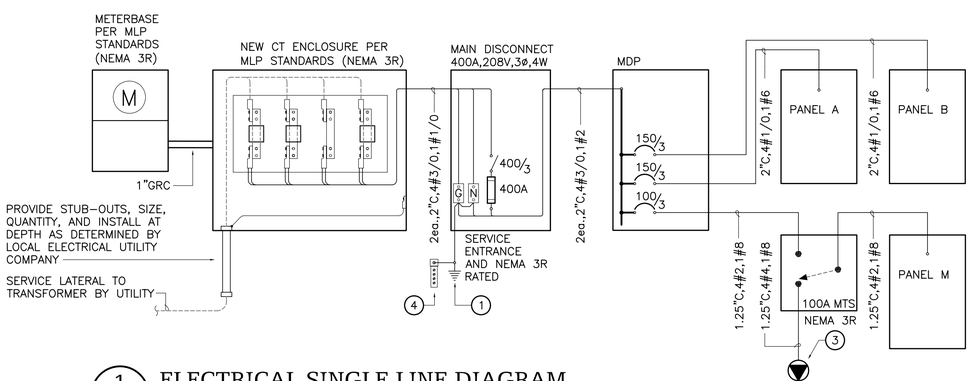

1 ELECTRICAL SINGLE LINE DIAGRAM

E3.3 SCALE: NTS

FAULT CURRENT ANALYSIS

BASIS OF CALCULATIONS:

VARIABLE	VALUE
PRIMARY BUS	INFINITE MVA
UTILITY TRANSFORMER RATING	75 KVA
UTILITY TRANSFORMER IMPEDANCE	1.2%
VOLTAGE (LINE TO LINE)	120/208 VOLTS, 3ø
SERVICE LATERAL LENGTH	50 FT
SERVICE LATERAL CONDUCTOR SIZE	#4/0 kcmil AL
CONDUCTORS PER PHASE	1
CONDUIT TYPE	NON-MAGNETIC

CALCULATION SUMMARY:

LOCATION	SHORT CIRCUIT CURRENT
UTILITY TRANSFORMER SECONDARY	17,349 AMPS
MAIN DISCONNECT	10,600 AMPS
MDP	8,100 AMPS
PANEL A	7,800 AMPS
PANEL B	7,800 AMPS
MANUAL TRANSFER SWITCH	4,000 AMPS
PANEL M	4,000 AMPS

CONTRACTOR TO CONFIRM ACTUAL VALUES OF ABOVE LISTED CALCULATION VARIABLES WITH SERVING UTILITY PRIOR TO ORDERING EQUIPMENT. IF ELECTRICAL UTILITY EQUIPMENT AND INSTALLATION DEVIATES FROM THE BASIS ITEMIZED ABOVE, THE CONTRACTOR SHALL CONSULT WITH THE ENGINEER OF RECORD TO CONFIRM THE AIC RATING REQUIRED FOR ELECTRICAL DISTRIBUTION EQUIPMENT. ALL EQUIPMENT SHALL BE RATED FOR AVAILABLE FAULT CURRENT.

DETAIL NOTES:

1. PROVIDE GROUNDING ELECTRODE SYSTEM AS FOLLOW: #1/0 CU. TO WATER MAIN, #1/0 CU. TO BUILDING STEEL, 20' OF #4 CU. ENCASED IN FOOTING CONCRETE AND BONDED TO REBAR. AND #6 CU. TO 2 DRIVEN ROD ELECTRODES.
2. IMMEDIATELY UPON PROJECT INCEPTION THE CONTRACTOR SHALL COORDINATE WITH THE LOCAL ELECTRICAL UTILITY COMPANY (McGRATH LIGHTING AND POWER, LOUIS ENGRASS 907 524-3391 or ERNIE BAUMGARTNER 907 524-3360) FOR THE INSTALLATION OF A NEW ELECTRICAL SERVICE TO THE BUILDING AS SHOWN. ALL EQUIPMENT AND INSTALLATION SHALL COMPLY WITH THE LOCAL ELECTRICAL UTILITY COMPANY STANDARDS AND THE LATEST ADOPTED NEC.
3. WEATHERPROOF 60 AMP, 208 VOLT, FOUR WIRE MALE RECEPTACLE FOR PORTABLE GENERATOR SUPPLY TO BUILDING. PROVIDE TO OWNER A MATCHING FEMALE PLUG FOR WIRING TO GENERATOR.
4. INTERSYSTEM BONDING TERMINATION PER NEC 250.94 FOR CONNECTION TO COMMUNICATIONS BONDING AND GROUNDING CONDUCTORS.

DENALI COMMISSION ALASKA

DATE	REVISIONS	INIT.

STATE OF ALASKA 16409 BRETT BINGHAM REGISTERED PROFESSIONAL ENGINEER

ALASKA NATIVE TRIBAL HEALTH CONSORTIUM

DIVISION OF ENVIRONMENTAL HEALTH AND ENGINEERING
1901 SOUTH BRAGAW STREET, SUITE 200
ANCHORAGE, ALASKA, 99508-3440
(907) 729-3600

McGRATH SUB-REGIONAL HEALTH CENTER

SINGLE LINE DIAGRAM AND PANEL SCHEDULES

DATE: 04/20/09
SCALE: AS NOTED
DRAWN BY: BAB
FILE NAME: 08167-E33
LAYOUT NAME: LAYOUT1
PROJ ENG: BRETT BINGHAM, P.E.

SHEET E3.3

7 OF 9E

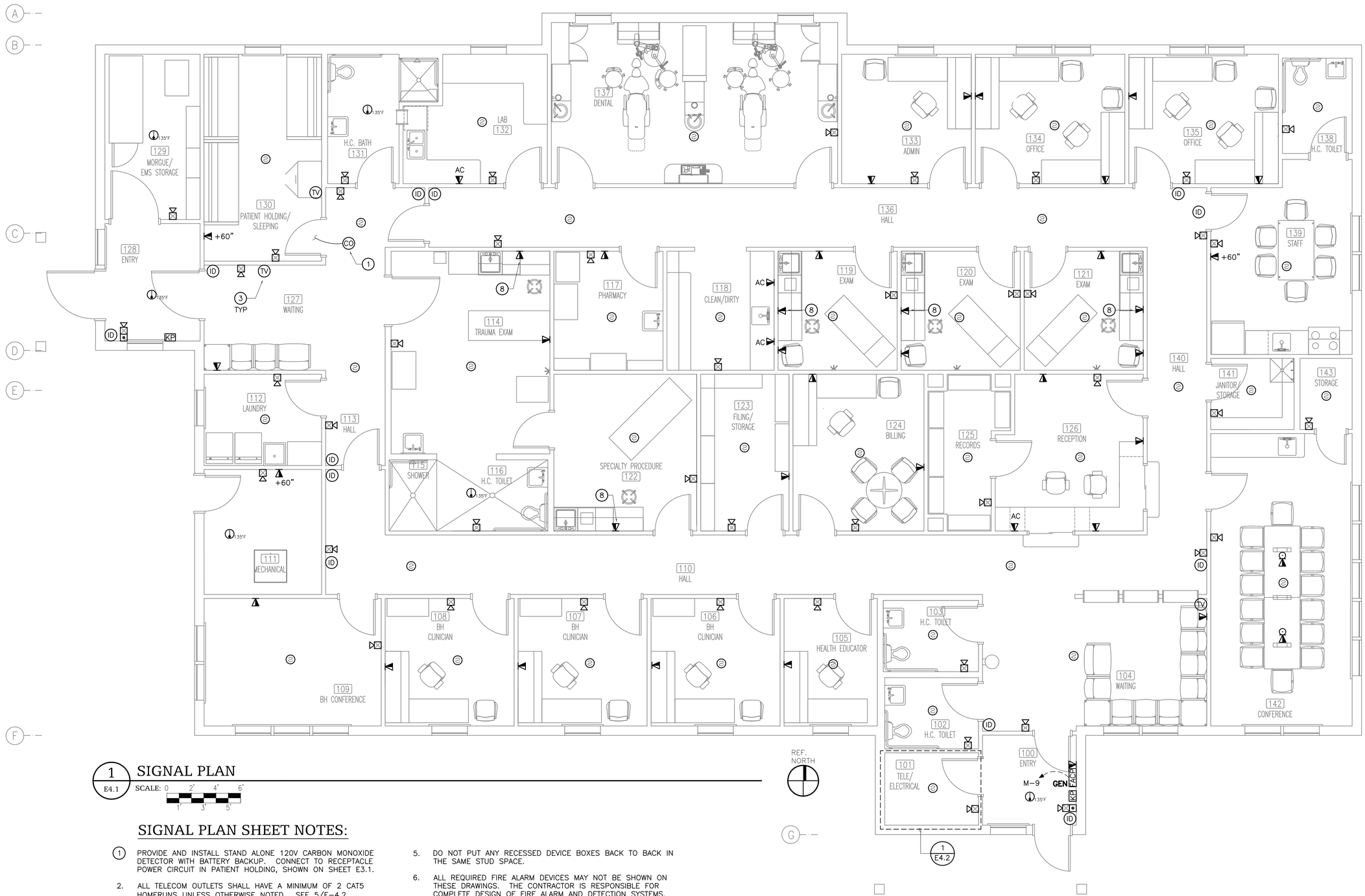

1 SIGNAL PLAN

E4.1

SCALE: 0 2' 4' 6' / 1' 3' 5'

SIGNAL PLAN SHEET NOTES:

1. PROVIDE AND INSTALL STAND ALONE 120V CARBON MONOXIDE DETECTOR WITH BATTERY BACKUP. CONNECT TO RECEPTACLE POWER CIRCUIT IN PATIENT HOLDING, SHOWN ON SHEET E3.1.
2. ALL TELECOM OUTLETS SHALL HAVE A MINIMUM OF 2 CAT5 HOMERUNS UNLESS OTHERWISE NOTED. SEE 5/E-4.2.
3. PRE-WIRE TV OUTLETS WITH RG59 CABLE TO TELECOM. DEMARC. BOARD, TYP. COORDINATE HEIGHT WITH ARCHITECTURAL DRAWINGS.
4. STUB UP MIN. OF 3/4"C INTO ACCESSIBLE ATTIC SPACE FOR EACH TELECOM OUTLET.
5. DO NOT PUT ANY RECESSED DEVICE BOXES BACK TO BACK IN THE SAME STUD SPACE.
6. ALL REQUIRED FIRE ALARM DEVICES MAY NOT BE SHOWN ON THESE DRAWINGS. THE CONTRACTOR IS RESPONSIBLE FOR COMPLETE DESIGN OF FIRE ALARM AND DETECTION SYSTEMS. PROVIDE ALL NECESSARY DEVICES, WIRING, ETC. AS REQUIRED FOR COMPLIANCE WITH GOVERNING CODES INCLUDING DETECTORS THAT MAY BE REQUIRED IN CRAWLSPACES, ATTICS, ABOVE CEILINGS SPACES, CONNECTIONS TO SPRINKLER SYSTEMS, FIRE PUMPS, ETC.
7. THE EXTERIOR WALL SHALL NOT BE PENETRATED AND ALL CEILING PENTRATIONS SHALL HAVE SOLID BLOCK AND WEATHER TIGHT BOXES.

DATE	REVISIONS	INIT.

STATE OF ALASKA 49th BRETT BINGHAM P.E. 12009 REGISTERED PROFESSIONAL ENGINEER

ALASKA NATIVE TRIBAL HEALTH CONSORTIUM

DIVISION OF ENVIRONMENTAL HEALTH AND ENGINEERING
1901 SOUTH BRAGAW STREET, SUITE 200
ANCHORAGE, ALASKA, 99508-3440
(907) 729-3600

ALASKA NATIVE TRIBAL HEALTH CONSORTIUM

McGRATH SUB-REGIONAL HEALTH CENTER

SIGNAL PLAN

DATE: 04/20/09
SCALE: AS NOTED
DRAWN BY: EDA

FILE NAME: 08167-E41
LAYOUT NAME: LAYOUT1
PROJ ENG: BRETT BINGHAM, P.E.

DENALI COMMISSION ALASKA

SHEET E4.1

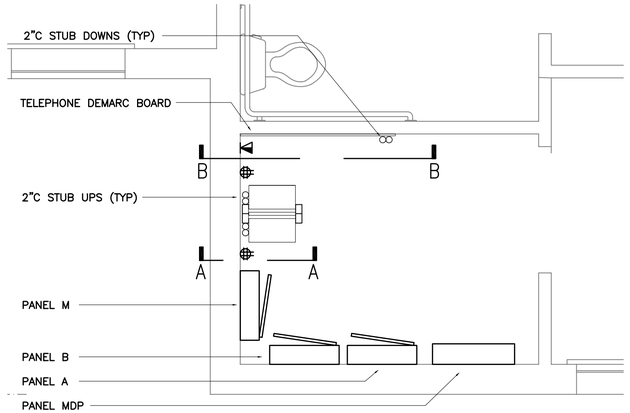

1 TELECOM ROOM DETAIL

E4.2 SCALE: 01" 6" 1' 2' 3' / 3" 9"

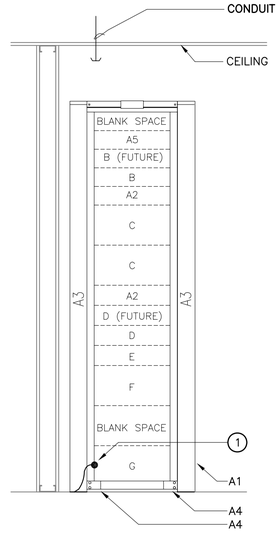

PROVIDE THE FOLLOWING RACK EQUIPMENT AS NOTED:

A1–UNIVERSAL SELF SUPPORT RACK, 7'–0" HIGH, 19" WIDE, EXTRUDED ALUMINUM, CLEAR COAT FINISH, CPI–55053–503

A2–HORIZONTAL WIRE MANAGEMENT PANEL, 2RMU, CLEAR CPI 13075–519

A3–DOUBLE–SIDED NARROW VERTICAL RACK CABLING SECTION, CLEAR CPI 12096–503

A4–RACK SEISMIC GUSSET KIT, CPI 11592–701

A5–MODEM SHELF (MODEM NIC)

B– 24 PORT RJ–45 PATCH PANEL FOR TELCO, PRECONFIGURED 25PR,TERMINATED 1–PAIR PER JACK, CONNECTORIZED

C– 48–PORT RJ–45 PATCH PANEL FOR CAT 5E DISTRIBUTION

D– 24–PORT ACTIVE HUB (NIC)

E– MONITOR/KEYBOARD/MOUSE (NIC)

F– SERVER (NIC)

G– 1.0 KVA UPS (NIC)

DETAIL NOTES

1 ALL GROUND CONNECTIONS SHALL BE IRREVERSABLE CRIMP TYPE.

2 TELECOM ROOM RACK DETAIL A-A

E4.2 SCALE: NTS

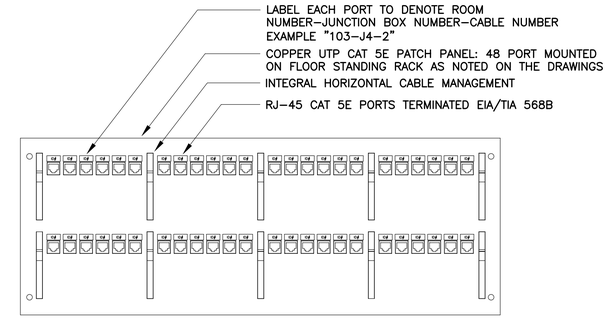

3 TELECOM PATCH PANEL (TYP)

E4.2 SCALE: NTS

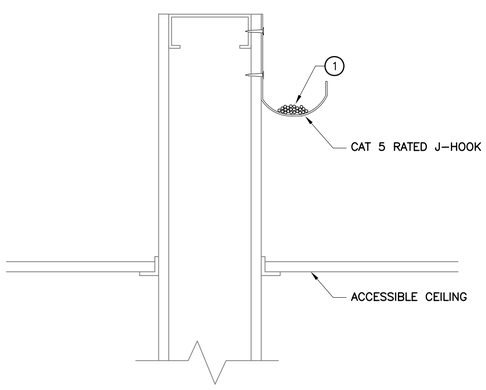

DETAIL NOTES

1 PROVIDE CAT 5 RATED J–HOOKS TO SUPPORT ALL CABLES WHERE NOT INSTALLED IN CONDUIT. SIZE J–HOOKS TO ALLOW 20% SPARE CAPACITY FOR FUTURE CABLES.

4 TYP. CABLE SUPPORT

E4.2 SCALE: NTS

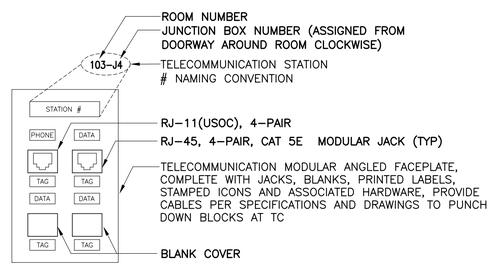

DETAIL NOTES

1. EACH DEVICE PLATE SHALL BE 4 PORT MINIMUM WITH (1) RJ–11 AND (1) RJ–45 JACK CAT 5E RATED, UON ON THE DRAWINGS.
2. FILL ACTIVE PORTS IN FACEPLATE FROM LEFT TO RIGHT AND TOP TO BOTTOM.
3. TERMINATE EACH CAT 5E CABLE ON RJ–11 OR RJ–45 CAT 5E RATED JACK AS INDICATED.
4. PROVIDE BLANKS FOR UNUSED PORT SPACES.
5. PROVIDE LABEL DENOTING ROOM NUMBER AND JUNCTION BOX NUMBER AS SHOWN ON THE FLOOR PLANS ON EACH DEVICE PLATE WHERE NOTED ABOVE AS STATION NUMBER.
6. ALL LABELS SHALL BE PRINTED WITH THERMAL OR LASER PRINTER SYSTEM.

5 TELECOM OUTLET (TYP.)

E4.2 SCALE: NTS

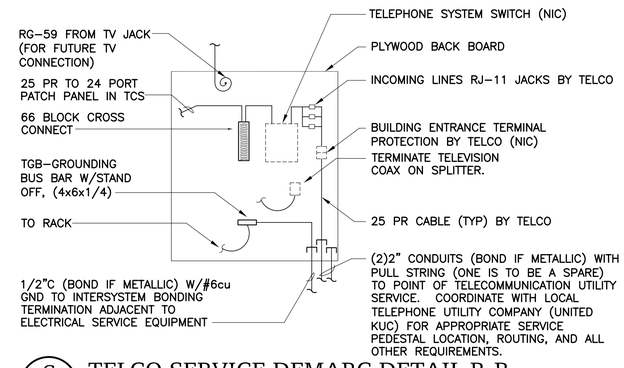

6 TELCO SERVICE DEMARC DETAIL B-B

E4.2 SCALE: 1/2" = 1'-0"

DATE	REVISIONS	INIT.

STATE OF ALASKA 24010 BRETT BINGHAM REGISTERED PROFESSIONAL ENGINEER

ALASKA NATIVE TRIBAL HEALTH CONSORTIUM

DIVISION OF ENVIRONMENTAL HEALTH AND ENGINEERING
1901 SOUTH BRAGAW STREET, SUITE 200
ANCHORAGE, ALASKA, 99508–3440
(907) 729–3600

McGRATH SUB–REGIONAL HEALTH CENTER
SIGNAL DETAILS

DATE: 04/20/09
SCALE: AS NOTED
DRAWN BY: BAB
FILE NAME: 08167–E42
LAYOUT NAME: LAYOUT1
PROJ ENG: BRETT BINGHAM, P.E.

SHEET E4.2

9 OF 9E