KOHLER®
Power Systems

Electric
Power

Generator Set
Submittal

KOHLER 80REOZJF PACKAGED ENGINE GENERATOR SET

RATED 80 EKW STANDBY POWER, 240 VOLT, 60 HZ

PROJECT:

SOUTHCENTRAL FOUNDATION
Q HOUSE GENERATOR

SEPTEMBER 13, 2021

THIS PAGE INTENTIONALLY BLANK

TECHNICAL SUBMITTAL DATA

KOHLER 80REOZJF PACKAGED
ENGINE GENERATOR SET
RATED 80 EKW STANDBY POWER, 240 VOLT, 60 Hz

QUOTE# 2100038-02

PROJECT:

SOUTHCENTRAL FOUNDATION

Q HOUSE

SEPTEMBER 13, 2021

KOHLER
Power Systems

THIS PAGE INTENTIONALLY BLANK

TABLE OF CONTENTS

THIS PAGE INTENTIONALLY BLANK

SECTION ONE

SCOPE OF SUPPLY

THIS PAGE INTENTIONALLY BLANK

KOHLER
IN POWER. SINCE 1920.

SEPTEMBER 1, 2021
QUOTATION: 2100038-02 SCF GENERATORS – Q House – 80KW

KOHLER MODEL 80REOZJF DIESEL PACKAGE GENERATOR SET
RATED 80EKW STANDBY POWER @ 1.0 PF, CONNECTED FOR 240V, 1-PHASE, 60 HZ

49th State Power is pleased to offer the following Packaged Generator System for your use on the referenced project. This proposal is in accordance with your verbal request. No written details, plans, or specifications were provided.

Kohler Standby Generator Model Number: **80REOZJF**
Configuration: 80kw, 120/240V, 1 Phase, 4 Wire, John Deere Engine

- UL2200 Listed and IBC Seismic Certification
- Fuel: Diesel
- Steel Sound Enclosure with Internal Silencer
- 24 Hour, 215 Gallon Sub-Base Fuel Tank
- APM603 Controller
- Run Relay, 2 Input / 5 Output Module
- 1500W, 120V, Block Heater
- 400A, Line Circuit Breaker, 100% Rated
- 10 Amp Float/Equalizing Battery Charger
- Battery Rack and Cables

Additional Items

- 1 Set, Operation and Maintenance Manuals

DEALER SUPPLIED EQUIPMENT:

80kW OUTDOOR FREESTANDING LOAD BANK, 240V, NEMA 3R, W/ HEATERS

Capacity:	80KW, 1.0 PF,
Voltage:	240V AC, 1-phase, 3-wire
Frequency:	60 Hz
Load steps:	5 KW load step resolution
Duty cycle:	Continuous
Ambient temp:	120°F
Exhaust rise:	150°F (Note: as airflow is not laminar, exhaust air temperatures are not equal at all points at the plane of air exhaust. Some parcels of air may reach approximately 600°F before mixing)
Airflow req'd:	6,000 cfm.
Fan/Control power:	Internal, 480V, 3-phase. Control circuits at 120V via transformer and 24vDC via power supply. Cooling fan motor at line voltage. Control circuits fused, 100,000 A.I.C. current limiting type, 600V fuses. Cooling fan: 5.0 HP, 60 hertz.
Control load:	Approx. 500VA, 230/460v, 2.2/1.1a
Heater:	External, 120v, 15A service

600A AUTOMATIC TRANSFER SWITCH
Product Family: Wall Mount
Switch Type: Automatic Contactor 40A thru 1600A
240/120v, 60hz, 1 Phase, 3 Wire, 2 poles
Transition Mode: Open
Controller Type: ATC-300+
Continuous Current: 600 Amps
Withstand: 65kA spc bkr/50kA (0.05 sec) and 30kA (0.13 sec)
Normal Source Terminals: (2) 1/0-750 CU/AL
Emergency Source Terminals: (2) 1/0-750 CU/AL
Load Side Terminals: (2) 1/0-750 CU/AL
Neutral Terminals: (12) 1/0-750 CU/AL

KOHLER.
IN POWER. SINCE 1920.

Standard Features: 1a, 2a, 3a, 4a, 5j, 5k, 6b, 7a, 8c, 8d, 12c, 12d, 12g, 12h, 14l, 14m, 15e, 15f, 23k, 26d, 26j, 26k, 32d, 35a, 42, 48f, 49c,
Optional Features: 41a, 81a

Qty	List of Materials
1	ATC3C5 2 Poles 600 Amps
1	Enclosure - Type-3R
1	1a. Time Delay Normal to Emergency Adj. 0-1800 sec
1	2a. Time Delay Engine Start Adj. 0-120 sec
1	3a. Time Delay Emergency to Normal Adj. 0-1800 sec
1	4a. Time Delay Engine Cool-off Adj. 0-1800 sec
1	5j. Emergency (S2) Sensing Under Voltage/Under Freq
1	5k. Emergency (S2) Sensing Over Voltage/Over Freq
1	6b. Test Pushbutton
1	7a. Time Delay Engine Fail Adj. 0-6 sec
1	8c. Time Delay Bypass Emergency to Normal
1	8d. Time Delay Bypass Normal to Emergency
1	12c. LED Indicator Normal Position
1	12d. LED Indicator Emergency Position
1	12g. LED Indicator Normal Source Present
1	12h. LED Indicator Emergency Source Present
1	14l. Normal (S1) Source Present (2 Form C)
1	14m. Emergency (S2) Source Present (2 Form C)
1	15e. Normal (S1) Position Indication (1 Form C Micro Switch Outputs)
1	15f. Emergency (S2) Position Indication (1 Form C Micro Switch Outputs)
1	22. Ground Bar
1	23k. Auto Plant Exerciser 1/7/14/28 Day
1	26d. Go To Source 2
1	26j. Normal (S1) Sensing Under-voltage/Under-frequency
1	26k. Normal (S1) Sensing Over-voltage/Over-frequency
1	32d. In-Phase Transition defaults to Time Delay Neutral
1	35a. Pre-transfer Signal Contacts (1 Form C)
1	41a. 100 Watt Space Heater with Thermostat
1	42. IBC/CBC Seismic Qualified
1	48f. MODBUS Communication
1	49c. Multi-Tap Transformer
1	81a. General Alarm Indication Contact

DEALER SUPPLIED SERVICES:

INSTALL SECOND CIRCUIT BREAKER
RECONFIGURE GENERATOR VOLTAGE

DEALER SUPPLIED SITE SERVICES:

ONSITE STARTUP & OWNER TRAINING

KOHLER.
IN POWER. SINCE 1920.

PRICING SUMMARY:

One (1) 80kW Generator Set, 600A ATS, & 80kW Load Bank.....
Lead Time:

- **Genset 3 – 4 weeks from receipt of purchase order and approved submittal.**
- **ATS 12 – 14 weeks from receipt of purchase order and approved submittal.**
- **Load Bank 12 – 14 weeks from receipt of purchase order and approved submittal.**

All items are proposed FOB Jobsite Anchorage, AK. Offloading by others.

ATS Breakout.....

Thank you,

1. **The above quoted prices are subject to change without notice; price quoted is valid for 30 days.**
2. **The above quoted prices do not include state and local taxes, if applicable.**
3. **All orders to purchase or lease based on this quotation shall be subject to acceptance by 49th State Power. All transactions shall be made on, and subject to 49th State Power standard terms, conditions and warranties, or modified documents reflecting mutually agreeable terms.**
4. **Provides Kohler Warranty for parts and labor on Kohler products. All other manufacturer's warranties apply per their respective warranty statements.**
5. **49th State Power will not be responsible for, or subject to, penalties attributed to force majeure.**
6. **This proposal represents 49th State Power best interpretation of the project requirements, which may vary from other's interpretation. If equipment or services are not described, they cannot be construed to be included in this scope of supply.**
7. **Progress Payment Schedule to be negotiated at time of order.**

THIS PAGE INTENTIONALLY BLANK

SECTION TWO

KOHLER GENSET CATALOG DATA

THIS PAGE INTENTIONALLY BLANK

KOHLER®

80REOZJF
Diesel

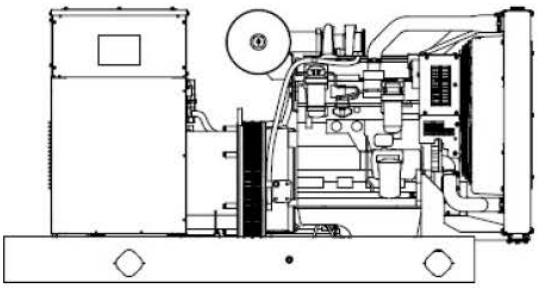

Standard Features

- Kohler Co. provides one-source responsibility for the generating system and accessories.
- The generator set and its components are prototype-tested, factory-built, and production-tested.
- The 60 Hz generator set offers a UL 2200 listing.
- The generator set accepts rated load in one step.
- The 60 Hz generator set meets NFPA 110, Level 1, when equipped with the necessary accessories and installed per NFPA standards.
- A one-year limited warranty covers all systems and components. Two-, five-, and ten-year extended warranties are also available.
- Tier 3 EPA-certified for Stationary Emergency Applications
- Alternator Protection
- Battery Rack and Cables
- Local Emergency Stop Switch
- Oil Drain Extension
- Operation and Installation Literature

Alternator Features

- The unique Fast-Response X excitation system delivers excellent voltage response and short circuit capability using a rare-earth, permanent magnet (PM)-excited alternator.

Other Features

- Kohler designed controllers for one-source system integration and remote communication.
- The low coolant level shutdown prevents overheating (standard on radiator models only).
- Integral vibration isolation eliminates the need for under-unit vibration spring isolators.
- Mount up to three circuit breakers to allow circuit protection of selected priority loads. (maximum two circuit breakers with the 4P10X alternator).

Generator Set Ratings

					Standby 130C Rise Ratings	
Alternator	Voltage	Ph	Hz	Peak kVA	kW/kVA	Amps
4R9X	GENERATOR TO BE RECONNECTED FOR 240V SINGLE PHASE.					

RATINGS: All three-phase units are rated at 0.8 power factor. All single-phase units are rated at 1.0 power factor.
Standby Ratings: The standby rating is applicable to varying loads for the duration of a power outage. There is no overload capability for this rating.
Prime Power Ratings: At varying load, the number of generator set operating hours is unlimited. A 10% overload capacity is available for one hour in twelve.
Ratings are in accordance with ISO-8528-1 and ISO-3046-1. For limited running time and continuous ratings, consult the factory.
Obtain technical information bulletin (TIB-101) for ratings guidelines, complete ratings definitions, and site condition derates.
The generator set manufacturer reserves the right to change the design or specifications without notice and without any obligation or liability whatsoever.

Model: 80REOZJF, continued

Alternator Specifications

Specifications	Alternator
Alternator manufacturer	Kohler
Type	4-Pole, Rotating-Field
Exciter type	Brushless, Rare-Earth Permanent-Magnet
Leads, quantity	12, Reconnectable
Voltage regulator	Solid State, Volts/Hz
Insulation	NEMA MG1
Insulation: Material	Class H
Insulation: Temperature Rise	130°C, Standby
Bearing: quantity, type	1, Sealed
Coupling	Flexible disc
Amortisseur windings	Full
Voltage regulation, no-load to full-load RMS	Controller Dependent
One-Step Load Acceptance	100% of rating
Unbalanced load capability	100% of Rated Standby Current

- NEMA MG1, IEEE, and ANSI standards compliance for temperature rise and motor starting.
- Sustained short-circuit current of up to 300% of the rated current for up to 10 seconds.
- Sustained short-circuit current enabling down stream circuit breakers to trip without collapsing the alternator field.
- Self-ventilated and dripproof construction.
- Vacuum-impregnated windings with fungus-resistant epoxy varnish for dependability and long life.
- Superior voltage waveform from a two-thirds pitch stator and skewed rotor.

Engine

Engine Specification	
Engine Manufacturer	John Deere
Engine Model	4045HF285H
Engine: type	4-Cycle, Turbocharged, Charge Air-Cooled
Cylinder arrangement	4 Inline
Displacement, L (cu. in.)	4.5 (276)
Bore and stroke, mm (in.)	106 x 127 (4.19 x 5.00)
Compression ratio	19:01
Piston speed, m/min. (ft./min.)	457 (1500)
Main bearings: quantity, type	5, Replaceable Insert
Rated rpm	1800
Max. power at rated rpm, kWm (BHP)	99 (133)
Cylinder head material	Cast Iron
Crankshaft material	Forged Steel
Valve (exhaust) material Intake	Chromium-Silicon Steel
Valve (exhaust) material	Stainless Steel
Governor: type, make/model	JDEC Electronic L16 Denso HP3
Frequency regulation, no-load to-full load	Isochronous
Frequency regulation, steady state	±0.25%
Frequency	Fixed
Air cleaner type, all models	Dry

Model: 80REOZJF, continued

Exhaust

Exhaust System

Exhaust Manifold Type	Dry
Exhaust flow at rated kW, m3/min. (cfm)	19.2 (679)
Exhaust temperature at rated kW, dry exhaust, °C (°F)	579 (1074)
Maximum allowable back pressure, kPa (in. Hg)	7.5 (2.2)
Exh. outlet size at eng. hookup, mm (in.)	98 (3.86)

Engine Electrical

Engine Electrical System

Battery charging alternator	12 Volt
Battery charging alternator: Ground (negative/positive)	Negative
Battery charging alternator: Volts (DC)	12
Battery charging alternator: Ampere rating	65
Starter motor rated voltage (DC)	12
Battery, recommended cold cranking amps (CCA): Qty., CCA rating each	One, 640
Battery voltage (DC)	12

Fuel

Fuel System

Fuel type	Diesel
Fuel supply line, min. ID, mm (in.)	11.0 (0.44)
Fuel return line, min. ID, mm (in.)	6.0 (0.25)
Max. lift, fuel pump: type, m (ft.)	Engine-Driven, 1.8 (6.0)
Max. fuel flow, Lph (gph)	62.5 (16.5)
Max. return line restriction, kPa (in. Hg)	20 (5.9)
Fuel prime pump	Manual
Fuel Filter Secondary	2 Microns@ 98% Efficiency
Fuel Filter Primary	30 Microns
Fuel Filter Water Separator	Yes
Recommended fuel	#2 Diesel

Lubrication

Lubrication System

Type	Full Pressure
Oil pan capacity, L (qt.)	14.7 (15.5)
Oil pan capacity with filter, L (qt.)	15.6 (16.5)
Oil filter: quantity, type	1, Cartridge
Oil cooler	Water-Cooled
	Full Pressure
	14.7 (15.5)
	15.6 (16.5)
	1, Cartridge
	Water-Cooled

Model: 80REOZJF, continued

Cooling

Radiator System

Ambient temperature, °C (°F)	50 (122)
Engine jacket water capacity, L (gal.)	8.5 (2.25)
Radiator system capacity, including engine, L (gal.)	20.1 (5.3)
Engine jacket water flow, Lpm (gpm)	155 (41)
Heat rejected to cooling water at rated kW, dry exhaust, kW (Btu/min.)	54.4 (3096)
Heat rejected to air charge cooler at rated kW, dry exhaust, kW (Btu/min.)	13.5 (768)
Water pump type	Centrifugal
Fan diameter, including blades, mm (in.)	600 (23.6)
Fan, kWm (HP)	6.6 (8.8)
Max. restriction of cooling air, intake and discharge side of radiator, kPA (in. H20)	0.125 (0.5)

* Enclosure with internal silencer reduces ambient temperature capability by 5°C (9°F).

Operation Requirements

Air Requirements

Radiator-cooled cooling air, m3/min. (scfm) *	142 (5000)
Combustion air, m3/min. (cfm)	6.9 (244)
Heat rejected to ambient air: Engine, kW (Btu/min.)	22.9 (1300)
Heat rejected to ambient air: Alternator, kW (Btu/min.)	9.8 (560)

*Air density = 1.20 kg/m3 (0.075 lbm/ft3)

Fuel Consumption

Diesel, Lph (gph), at % load	Rating
Standby Fuel Consumption at 100% load	26.1 Lph (6.9 gph)
Standby Fuel Consumption at 75% load	21.2 Lph (5.6 gph)
Standby Fuel Consumption at 50% load	15.5 Lph (4.1 gph)
Standby Fuel Consumption at 25% load	8.3 Lph (2.2 gph)
Prime Fuel Consumption at 100% load	23.8 Lph (6.3 gph)
Prime Fuel Consumption at 75% load	19.3 Lph (5.1 gph)
Prime Fuel Consumption at 50% load	14.4 Lph (3.8 gph)
Prime Fuel Consumption at 25% load	7.9 Lph (2.1 gph)

Dimensions and Weights

Dim Weight Spec	Dim Weight Value
Fuel	Diesel
Engine Manufacturer	Diesel
Overall Size, L x W x H, mm (in.): Wide Skid	See Enclosure ADV Drawing
Overall Size, L x W x H, mm (in.): Narrow Skid	2334 x 864 x 1216 (91.89 x 34.02 x 47.90)
Weight (radiator model), wet, kg (lb.):	1125 (2480)

Model: 80REOZJF, continued

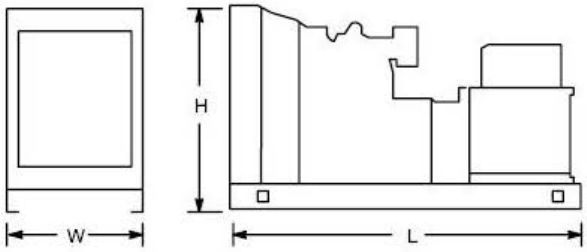

NOTE: This drawing is provided for reference only and should not be used for planning installation. Contact your local distributor for more detailed information.

THIS PAGE INTENTIONALLY BLANK

KOHLER.

Industrial Generator Set Accessories

Generator Set Controller

The APM603 generator set controller provides advanced control, system monitoring, and system diagnostics for a single generator set or paralleling multiple generator sets. The APM603 interfaces the generator set to other power system equipment and network management systems using standard industry network communications. It uses a patented digital voltage regulator and unique software logic to manage alternator thermal overload protection as well as serves as an overcurrent protective relay, features normally requiring additional hardware. The APM603 controller meets NFPA 110, Level 1.

Display, Interface, and Accessibility

- A 7-inch color TFT touchscreen for easy local access to data.
  - Home screen can be customized to show critical data at a glance.
  - Create a custom favorites list for quick access to important data
- Measurements are selectable in metric or English units.
- Supports Modbus® protocol through serial bus and Ethernet networks, and supports SNMP and BACnet® through Ethernet networks.

Global Support

- Sales, installation, and service support from more than 800 Kohler and SDMO service providers around the world.

On-board Diagnostics

- Immediate visibility of warnings and faults with text description and code display.
  - 15 seconds of critical data are captured around each warning and fault
  - Critical data can be viewed on the display and downloaded
- Store up to 10,000 events locally along with historical data logging of successful starts.
  - Accurate time stamp from real-time clock
  - Event log can be downloaded
- Data logging of customized parameter list for report generation and advanced troubleshooting.
  - Store to external USB drive for easy transfer to another device

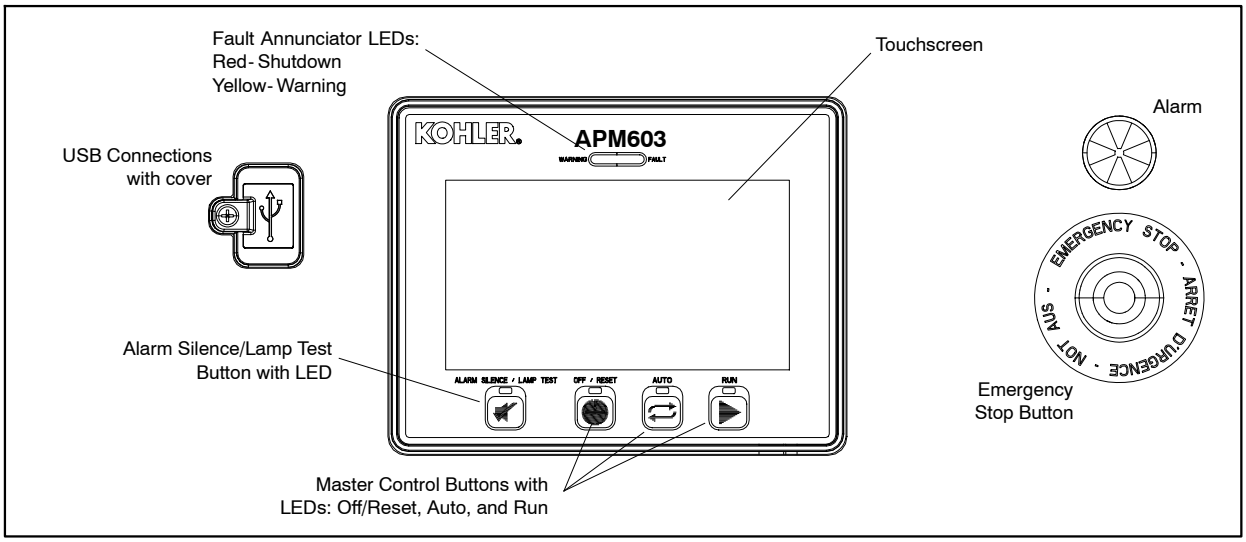

Controller Features

AC Output Voltage Regulator Adjustment	Maximum of ±10% of the system voltage
Alarm Horn	Indicates a generator set warning or shutdown condition
Alarm Silence	For NFPA-110 application or user convenience
Alternator Protection	Generator set overload and short circuit protection
Cyclic Cranking	Provides automatic restart after a failed start attempt with programmable on/off time and number of attempts
ECU Diagnostics	Displays engine ECU fault codes and descriptions for engine troubleshooting
Emergency Stop Button	Shuts down the generator set immediately, for emergency situations
Engine Start Aid	Control for an optional engine starting aid
Environmentally Sealed Membrane Keypad	Three master control buttons with LEDs: Off/Reset, Auto, and Run
Patented High-Speed RMS Digital Voltage Regulator	±0.25% no-load to full-load regulation with three-phase true RMS sensing
Lamp Test	Verifies functionality of the indicator LEDs
Real-time Clock	Includes battery back-up to retain date and time through controller power cycle
Remote Reset	Allows remote fault resets and restarting of the generator set
Remote Monitoring Panel	Compatible with the Kohler® Remote Serial Annunciator
Run Time Hourmeter	Displays generator set run time
Run Relay	Indicates that the generator set is running
Time Delay Engine Cooldown (TDEC)	Time delay before the generator set shuts down
Time Delay Engine Start (TDES)	Time delay before the generator set starts

Communication

USB Port	(1) Mini-USB port for PC connection (1) USB port for storage device
Serial (RS-485) Port	(1) Non-isolated for RSA III (1) Isolated for Modbus devices (1) Isolated for paralleling communication
Ethernet Port	(1) RJ45 for Modbus TCP, SNMP, and BACnet

Controller Specifications

Nominal voltage	12 or 24 VDC protected against reverse battery connection
Power	800 mAmps at 12 VDC 400 mAmps at 24 VDC
Operating Temperature	- 40°C to 70°C (- 40°F to 158°F)
Storage Temperature	- 40°C to 85°C (- 40°F to 185°F)
Humidity	5% to 95% non-condensing
Display Size, W x H	154 x 86 mm (6.0 x 3.4 inches)
Protection Index	IP65 Front

Paralleling Features

- Isochronous control with real and reactive load sharing with other APM603 controller equipped generator sets
  - Supports paralleling up to 8 generators
- Random first-on logic to prevent two or more generator sets from closing to a dead bus and provides the fastest response for a single generator online
- Automatic synchronizer with dead bus closing
- Soft loading and unloading for generator management
- Protective relay functions:
  - Synch check (25C)
  - Over current (51)
  - Over frequency (81O)
  - Over power (32O)
  - Over voltage (59)
  - Reverse power (32R)
  - Reverse reactive power (32RQ)
  - Under frequency (81U)
  - Under voltage (27)
- Generator management to allow the start and stop of generators based on load demand or state of other generators
  - Fuel level
  - Run time
  - Manual order
  - Time of day
  - Efficiency
- Simplified paralleling system view from any generator controller in the system

Overcurrent Protective Device

- Provides protection against line-to-line and line-to-neutral faults
- Uses thermal and instantaneous current limit settings for alternator protection
- Includes a maintenance mode for arc flash reduction per NEC 240.87

Load Management Features

- Programmable outputs included to command the connect and disconnect of loads based on generator or paralleling system state
  - Loads connected based on available capacity
  - Loads disconnected at system startup
  - Loads disconnected based on a maximum kW setting or underfrequency setting
- Supports up to 16 prioritized load steps per system
  - Can be used on a single generator system
  - Can be combined in a paralleling system for a total system load control capability
- Simplified load management system view from any generator controller in the system
- Requires input/output module option

Advanced Programmable I/O

- Configurable inputs and outputs can be programmed for customer specific use
- PLC-like capability for applying logic to customize generator system behavior

Troubleshooting Features

- 15 seconds of key data automatically captured around each warning and shutdown
  - Data can be exported for detailed analysis
  - Data can be viewed on controller for convenient on-site troubleshooting support
- Configurable data logger will allow you to select parameters to monitor
  - Data stored to USB device for flexibility on amount of data stored and ability to export for detailed analysis
  - Data capture controlled by user to allow capturing specific data required

NFPA 110 Requirements

In order to meet NFPA 110, Level 1 requirements, the generator set controller monitors the engine/generator functions/faults shown below.

- Engine functions:
  - Overcrank
  - Low coolant temperature warning
  - High coolant temperature warning
  - High coolant temperature shutdown
  - Low oil pressure shutdown
  - Low oil pressure warning
  - High engine speed
  - Low fuel (level or pressure) *
  - Low coolant level
  - EPS supplying load
  - High battery voltage
  - Low battery voltage
- General functions:
  - Master switch not in auto
  - Battery charger fault *
  - Lamp test
  - Contacts for local and remote common alarm
  - Audible alarm silence button
  - Remote emergency stop *

* Function requires optional input sensors or kits and is engine dependent, see Engine Data.

Standards

The generator set controller has been tested and verified for compliance with the following standards.

- NFPA 99
- NFPA 110, Level 1
- CSA 282-09
- UL 6200
- ASTM B117 (salt spray test)

Controller Functions

The controller displays warning, shutdown, and status messages. **All functions are available as relay outputs.**
Warning causes the yellow fault LED to show and sounds the alarm horn, signaling an impending problem.
Shutdown causes the red fault LED to show, sounds the alarm horn, and stops the generator set.

The controller communicates with the engine ECU and supports a large number of warning and shutdown events that are not listed here. This table highlights the items required for NFPA 110.

Event	Warning	Shutdown
Alternator Thermal Protection †		●
Battery Charger Fault *	▲	
CAN Option Board1 Comm Loss	▲	
Critically Low Fuel Level (diesel) *	▲	
ECU Diagnostic Event	▲	
ECU Mismatch Shutdown †		●
Fuel Leak Alarm (diesel) *	▲	
High Battery Voltage Warning	▲	
High Coolant Temperature Shutdown †		●
High Coolant Temperature Warning	▲	
High Fuel Level Warning (diesel) *	▲	
High Oil Temperature Shutdown †		●
High Oil Temperature Warning	▲	
Local Emergency Stop Shutdown †		●
Loss ECU Comms Shutdown †		●
Loss of Signal Low Coolant Level Voltage	▲	
Low Battery Voltage Warning	▲	
Low Coolant Level Shutdown †		●
Low Coolant Temperature Warning	▲	
Low Fuel Level Shutdown (diesel) * †		●
Low Fuel Level Warning (diesel) *	▲	
Low Fuel Pressure Warning (gas) *	▲	
Low Oil Pressure Shutdown †		●
Low Oil Pressure Warning	▲	
Low RTC (clock) Battery Voltage	▲	
Maintenance Reminder1	▲	
Maintenance Reminder2	▲	
Maintenance Reminder3	▲	
Maximum Power Shutdown †		●
Maximum Power Warning	▲	
Not In Auto Alarm	▲	
Over Crank Shutdown †		●
Over Current Shutdown (L1, L2, L3) †		●
Over Current Warning (L1, L2, L3)	▲	
Over Frequency Shutdown †		●
Over Frequency Warning	▲	
Over Power Shutdown †		●
Over Power Warning	▲	
Over Speed Shutdown †		●
Over Voltage Shutdown (L-L, L-N, each phase) †		●
Over Voltage Warning (L-L, L-N, each phase)	▲	

Event	Warning	Shutdown
Remote Emergency Stop Shutdown †		●
Reverse Power Shutdown †		●
Reverse VAR Shutdown †		●
Under Frequency Shutdown †		●
Under Frequency Warning	▲	
Under Voltage Shutdown (L-L, L-N, each phase) †		●
Under Voltage Warning (L-L, L-N, each phase)	▲	
Weak Cranking Battery	▲	
Status Messages		
Auto Button Pressed		
EPS Supplying Load		
Generator Running		
Generator Started		
Generator Stopped		
GFCI Warning *		
Load Shed Overload		
Load Shed Under Frequency		
Off Button Pressed		
RSA Event Programmable Digital Inputs, 1-8		
Run Button Pressed		

* Function requires optional input sensors or kits
† Items included with common fault shutdown 10

John Deere Engine-Powered Models Inputs and Outputs

Standard Dedicated User Inputs	Input Type
Auxiliary Fault (Shutdown)	Digital Input
Auxiliary Warning	
Battery Charger Fault	
Breaker Closed *	
Breaker Open *	
Excitation Over Voltage (350 kW and up)	
Fuel Leak Alarm	
Low Fuel Level Switch	
Remote Emergency Stop	
Remote Engine Start	Two-wire input
Speed Bias	Analog Voltage Input, Scalable up to +/- 10 VDC
Voltage Bias	

Standard Dedicated User Outputs	Output Type
Close Breaker *	Relay Driver Output
Common Failure	
Run	
Trip Breaker / Shunt Trip *	
* Only with remote- mounted electrically operated circuit breakers.	

Optional Configurable User Inputs and Outputs	
User Configurable Inputs	2 Analog, 0- 5 VDC 4 Dry Contact Digital
User Configurable Relay Outputs	14 NO/NC Relays 1 Common Fault Relay
Note: Programmable I/O is configurable by a Kohler-authorized technician	

JD Engine Data

The following John Deere engine data is displayed on the APM603 controller.

Parameter
Engine Model Number
Engine Serial Number
ECU Serial Number
Coolant Temperature
Engine Speed
Fuel Pressure
Fuel Consumption Rate
Oil Pressure
Run Time Hours

Kohler KD Engine-Powered Models Inputs and Outputs

Standard Dedicated User Inputs	Input Type
Auxiliary Fault (Shutdown)	Digital Input
Auxiliary Warning	
Battery Charger Fault	
Breaker Closed *	
Breaker Tripped/ Open *	
Fuel Leak Alarm	
Fuel Level	
Idle Switch	
Key Switch Enable	
Low Fuel Level Switch	
Low Oil Level	
Remote Emergency Stop	
Remote Reset	
Remote Engine Start	Two-wire input
Speed Bias	Analog Voltage Input, Scalable up to +/- 10 VDC
Voltage Bias	

Standard Dedicated User Outputs	Output Type
Close Breaker *	Relay Driver Output
Common Failure	
Common Warning	
EPS Supplying Load	
Generator Running	
Horn	
Low Coolant Temperature	
Not in Auto	
System Ready	
Trip Breaker / Shunt Trip *	
* Only with remote- mounted electrically operated circuit breakers.	

Optional Configurable User Inputs and Outputs	
User Configurable Inputs	16 Dry Contact Digital
User Configurable Relay Outputs	8 NO/NC Relays
Note: Programmable I/O is configurable by a Kohler-authorized technician.	

KD Engine Data

The following Kohler Diesel engine data is displayed on the APM603 controller.

Parameter
Engine Model Number
Engine Serial Number
Ambient Temperature
Charge Air Pressure
Charge Air Temperature
Common Rail Fuel Pressure
Coolant Level
Coolant Temperature
Crankcase Pressure
Engine Speed
Fuel Consumption Rate
Fuel Pressure
Fuel Temperature
Intercooler Coolant Temperature (K175 engines only)
Oil Temperature
Oil Pressure
Run Time Hours

Volvo Engine-Powered Models Inputs and Outputs

Standard Dedicated User Inputs	Input Type
Auxiliary Fault (Shutdown)	Digital Input
Auxiliary Warning	
Battery Charger Fault	
Breaker Closed *	
Breaker Tripped *	
Coolant Temperature	
Emergency Stop, Local	
Emergency Stop, Remote	
Excitation Over Voltage	
Fuel Leak Alarm	
Fuel Level	
Ground Fault Relay	
Key Switch Auto	
Key Switch Run	
Low Fuel Level Switch	
Remote Engine Start	Two-wire input
Speed Bias	Analog Voltage Input, Scalable up to +/- 10 VDC
Voltage Bias	

Standard Dedicated User Outputs	Output Type
Close Breaker *	Relay Driver Output
Common Failure	
Run	
Trip Breaker / Shunt Trip *	
* Only with remote- mounted electrically operated circuit breakers.	

Optional Configurable User Inputs and Outputs	
User Configurable Inputs	2 Analog, 0- 5 VDC 4 Dry Contact Digital
User Configurable Relay Outputs	14 NO/NC Relays 1 Common Fault Relay
Note: Programmable I/O is configurable by a Kohler-authorized technician	

PSI/Doosan Engine-Powered Models Inputs and Outputs

Standard Dedicated User Inputs	Input Type
Auxiliary Fault (Shutdown)	Digital Input
Auxiliary Warning	
Battery Charger Fault	
Breaker Closed *	
Breaker Tripped/Open *	
Emergency Stop, Local	
Emergency Stop, Remote	
Excitation Over Voltage	
Ground Fault Relay	
Fuel Type	
Low Fuel Pressure	
Remote Engine Start	Two-wire input
Speed Bias	Analog Voltage Input, Scalable up to +/- 10 VDC
Voltage Bias	

Standard Dedicated User Outputs	Output Type
Close Breaker *	Relay Driver Output
Common Failure	
Common Warning	
Crank	
High Coolant Temperature	
Horn	
Run	
Trip Breaker / Shunt Trip *	
* Only with remote- mounted electrically operated circuit breakers.	

Optional Configurable User Inputs and Outputs	
User Configurable Inputs	2 Analog, 0- 5 VDC 4 Dry Contact Digital
User Configurable Relay Outputs	14 NO/NC Relays 1 Common Fault Relay
Note: Programmable I/O is configurable by a Kohler-authorized technician	

Volvo Engine Data

The following Volvo engine data is displayed on the APM603 controller.

Parameter
Air Intake Pressure
Air Intake Temperature
Ambient Temperature
Barometric Pressure
Coolant Temperature
ECU Battery Voltage
ECU Runtime Hours
Engine Speed
Fuel Consumption Rate
Fuel Pressure
Intake Manifold Pressure
Intake Manifold Temperature
Intercooler Temperature
Mechanical Engine Load
Oil Pressure
Oil Temperature

PSI/Doosan Engine Data

The following engine data is displayed on the APM603 controller.

Parameter
Ambient Temperature
Coolant Temperature
ECU Runtime Hours
Engine Speed
Intake Manifold Pressure
Intake Manifold Temperature
Intercooler Temperature
Fuel Pressure
Mechanical Engine Load
Oil Pressure
Oil Temperature

Kohler KG Engine-Powered Models

Inputs and Outputs

Standard Dedicated User Inputs	Input Type
Auxiliary Fault (Shutdown)	Digital Input
Auxiliary Warning	
Battery Charger Fault	
Breaker Closed *	
Breaker Tripped/Open *	
Emergency Stop, Local	
Emergency Stop, Remote	
Excitation Over Voltage	
Ground Fault Relay	
Fuel Type	
Low Fuel Pressure	
Remote Engine Start	Two-wire input
Speed Bias	Analog Voltage Input, Scalable up to +/- 10 VDC
Voltage Bias	

Standard Dedicated User Outputs	Output Type
Close Breaker *	Relay Driver Output
Common Failure	
Common Warning	
Crank	
High Coolant Temperature	
Horn	
Run	
Trip Breaker / Shunt Trip *	
* Only with remote- mounted electrically operated circuit breakers.	

Optional Configurable User Inputs and Outputs	
User Configurable Inputs	2 Analog, 0- 5 VDC 4 Dry Contact Digital
User Configurable Relay Outputs	14 NO/NC Relays 1 Common Fault Relay
Note: Programmable I/O is configurable by a Kohler-authorized technician	

KG Engine Data

The following KG engine data is displayed on the APM603 controller.

Parameter
Coolant Temperature
ECU Runtime Hours
Engine Speed
Intake Manifold Pressure
Intake Manifold Temperature
Intercooler Temperature
Fuel Pressure
Oil Pressure
Oil Temperature

KOHLER CO., Kohler, Wisconsin 53044 USA
Phone 920-457-4441, Fax 920-459-1646
For the nearest sales and service outlet in the US and Canada, phone 1-800-544-2444
KOHLERPower.com

APM603 Available Options

- ❑ **Common Failure Relay** provides a relay output to signal a generator set fault.
- ❑ **Battery Charger** available with 6 amp, 10 amp, and 20 amp output for 12 and 24V DC voltage output. (Availability is generator model dependent.) The 10 amp and 20 amp models provide NFPA 110 charging and alarming capability.
- ❑ **Electrically Operated Circuit Breakers**
  - For paralleling systems
  - Available generator-mounted or remote-mounted
  - 24VDC
- ❑ **Ground Fault Relay** provides a relay output to signal a ground fault is detected.
- ❑ **Input/Output Module** for Kohler Diesel (KD) models provides:
  - 16 digital input connections with connection to ground
  - 8 relay output connections (Form C, rated 8A, 240 VAC or rated 0.5 A, 48 VDC)
- ❑ **Input/Output Module** for models other than KD provides:
  - 2 analog inputs (0- 5 VDC)
  - 4 digital input connections with connection to ground
  - 14 relay output connections (Form C, rated 10A, 120V)
  - 1 common fault relay output (NO, rated 2A, 24VDC)
- ❑ **Key Switch** to allow selection of RUN, OFF and AUTO modes. Lockable in the AUTO position by removing the key.
- ❑ **Remote Emergency Stop Switch** available as a wall mounted panel to remotely shut down the generator set.
- ❑ **Remote Monitoring Panel.** The Kohler® Remote Serial Annunciator (RSA) enables the operator to monitor the status of the generator set from a remote location, which may be required for NFPA 99 and NFPA 110 installations, and up to four Automatic transfer switches.
- ❑ **Shunt Trip Wiring** provides relay outputs to trip a shunt trip circuit breaker and to signal the common fault shutdowns. Contacts rated at 10 amps at 28 VDC or 120 VAC.

DISTRIBUTED BY:

Availability is subject to change without notice. Kohler Co. reserves the right to change the design or specifications without notice and without any obligation or liability whatsoever. Contact your local Kohler® generator set distributor for availability.

Industrial Generator Set Accessories

KOHLER®

Voltage Regulators

Integral Voltage Regulator with Kohler® APM603 Controllers and Menu-Driven Selections (80-4000 kW Generator Set Models)

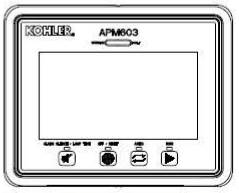

APM603 Controller with Integral Voltage Regulator

The voltage regulator is integral to the controller and uses patented high speed digital voltage regulator design providing ±0.25% no-load to full-load regulation using root-mean-square (RMS) voltage sensing.

Voltage Regulators

The following information provides general features, specifications, and functions of available voltage regulators.

This information generally applies to a single generator set and multiple generator sets with paralleling applications. Refer to the respective generator set specification sheet and see your authorized distributor for information regarding specific voltage regulator applications and availability.

Integral Voltage Regulators with APM603

Calibration	Range Settings	Default Selection
Voltage Adjustment	±10% of System Voltage	System Voltage
Controller Gain	40 to 70 Hz	P: 1.3 I: 1.0 D: 0.25
Underfrequency Unload or Frequency Setpoint	40 to 70 Hz	0.5 Hz Below System Frequency (ECM)
Underfrequency Unload Scope	0-10% of Rated Voltage (Volts per Cycle)	15 Volts per Cycle at 480 Volts (3.1%)
Reactive Dropp	0-10% of System Voltage	4% of System Voltage
VAR Control	-50% to 110%	0 kVAR
PF Adjust Control	-0.50 to 1.0 to 0.50	0.8 Lagging
VAR/PF Gain Adjustment	P: 0.3 to 3.00 I: 0.3 to 3.00 D: 0.3 to 3.00	P: 1.0 I: 1.0 D: 0.25

Industrial Generator Set Accessories

KOHLER®

Voltage Regulators

Specification/Feature	Integral with APM603
Generator Set Availability	80-4000 kW
Type	Patented Hybrid Design
Status and Shutdown Indicators	LEDs and Text LCD Display
Operating Temperature	-40°C to 70°C (-40°F to 158°F)
Storage Temperature	-40°C to 85°C (-40°F to 185°F)
Humidity	5-95% Non-Condensing
Circuit Protection	Solid-State, Redundant Software and Fuses
Sensing, Nominal	100-600 Volts (L-L), 50-60 Hz
Sensing Mode	RMS, Single- or 3-Phase
Input Requirements	8-36 VDC
Continuous Output	5.0 ADC with GM88453 Activator Board
Maximum Output	7.8 ADC with GM88453 Activator Board
Transition Frequency	50-70 Hz
Exciter Field Resistance	4-30 Ohms with GM88453 Activator Board
No-Load to Full-Load Voltage Regulation	±0.25%
Thermal Drift	<0.5% (-40°C to 70°C) [-40°F to 158°F] Range
Response Time	3-phase: 1 mS 1-phase: 5 mS
System Voltage Adjust.	±10%
Voltage Adjustment	Controller Display
Remote Voltage Adjustment	Analog 0-5 VDC (±10%) Input Optional
Paralleling Capability	Full Load Share and Control plus Reactive Droop
VAR/PF Control Input	VAR Control Mode, PF Control Mode, System VAR Control, System PF Control

Integral Voltage Regulator with APM603 Controller

- A 7.5-inch color TFT touchscreen provides access to data.
- The controller provides an interface between the generator set and switchgear for paralleling applications incorporating multiple generator set and/or utility feeds.
- The controller can control Fast Response™ II, Fast Responset™X, and PMG alternators using the GM88453 activator board.

Voltage Regulator Settings, APM603 Controller

- Voltage Regulator Configuration
  - Under Frequency Unload Settings
  - Single and Three Phase Sensing
  - Voltage Target
  - Voltage Regulator Gains

Paralleling Settings, APM603

- Synchronizing parameters setup
  - Voltage matching
  - Frequency matching
  - Phase matching
  - Time delay
- Load sharing
  - kW sharing
  - kVAR sharing
  - Baseload settings
  - Droop

Paralleling Metering, APM603

- Paralleling State
  - Paralleling Mode
  - System Voltage
  - System Frequency
  - Connected Generators
  - Sync Status
  - Engine Speed

KOHLER®

Activator Board GM88453

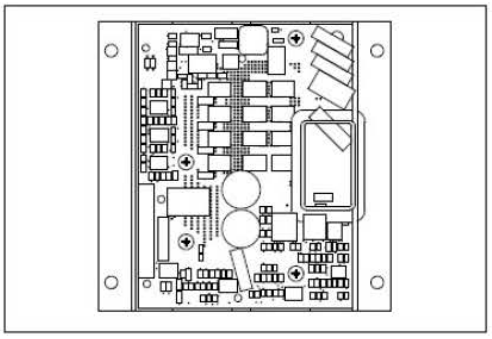

- Interfaces between the controller and alternator assembly using rotor field leads, auxiliary power windings, and optic board leads.
- Allows the Decision-Maker® controllers the ability to control a wound-field alternator using the same control signal as Fast Response™ alternator.
- Permits the generator set controller to control the current to the exciter field of a wound-field excited alternator.
- Contains two isolated relay driver outputs (RDO) rated at 250 mA. Provides RDO outputs indicating a field over-excitation condition and that the alternator is supplying voltage to the activator.

Modbus® is a registered trademark of Schneider Electric.

THIS PAGE INTENTIONALLY BLANK

KOHLER®

Industrial Generator Set Accessories

Line Circuit Breakers 15-3250 kW

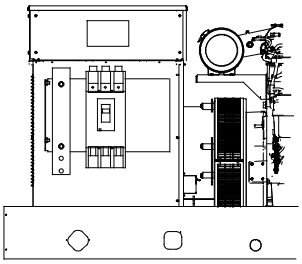

Single Circuit Breaker Kit with Neutral Bus Bar
15-300 kW Model Shown

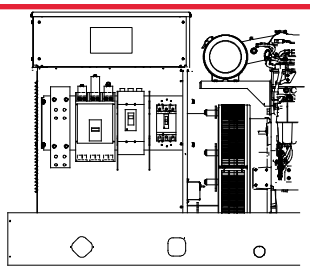

Multiple Circuit Breaker Kit with Neutral Bus Bar
180-300 kW Model Shown

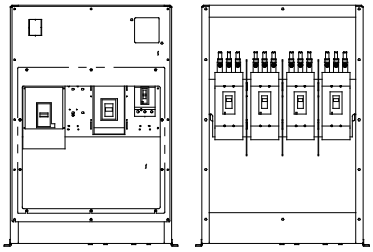

Multiple Circuit Breaker Kits with Neutral Bus Bar
350-2250 kW Model Shown
(also applies to some 300 kW models)

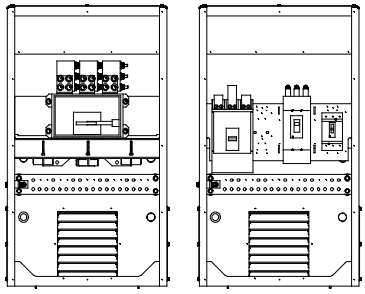

Circuit Breaker Kits with Neutral Bus Bar
800-2500 kW KD Model Shown

Standard Features

- The line circuit breaker interrupts the generator set output during a short circuit and protects the wiring when an overload occurs. Use the circuit breaker to manually disconnect the generator set from the load during generator set service.
- Circuit breaker kits are mounted to the generator set and are provided with load-side lugs and neutral bus bar.
- Kohler Co. offers a wide selection of molded-case line circuit breaker kits including single, dual, and multiple configurations for each generator set.
- Four types of line circuit breakers are available: (see page 2 for definitions and pages 3 and 4 for application details)
  - Magnetic trip
  - Thermal magnetic trip
  - Electronic trip
  - Electronic with ground fault (LSIG) trip
- In addition, line circuit breakers are offered with 80% and 100% ratings.
- Single line circuit breaker kits allow circuit protection of the entire electrical system load.
- Dual line circuit breaker kits allow circuit protection of selected priority loads from the remaining electrical system load.
- Multiple line circuit breaker kits with field connection barrier allow circuit protection for special applications (350-2500 kW models and selected 80-300 kW models).
- Up to four line circuit breakers can be used on 350-2500 kW models.
- Line circuit breakers comply with the following codes and standards unless otherwise stated.
  - UL 489 Molded Case Circuit Breakers
  - UL 1077 Supplementary Protectors
  - UL 2200 Stationary Engine Generator Assemblies

Line Circuit Breaker Types

Magnetic Trip

The magnetic trip features an electromagnet in series with the load contacts and a moveable armature to activate the trip mechanism. When a sudden and excessive current such as a short circuit occurs, the electromagnet attracts the armature resulting in an instantaneous trip.

Thermal Magnetic Trip

Thermal magnetic trip contains a thermal portion with a bimetallic strip that reacts to the heat produced from the load current. Excessive current causes it to bend sufficiently to trip the mechanism. The trip delay is dependent on the duration and excess of the overload current. Elements are factory- calibrated. A combination of both thermal and magnetic features allows a delayed trip on an overload and an instantaneous trip on a short circuit condition.

Electronic Trip

These line circuit breakers use electronic controls and miniature current transformers to monitor electrical currents and trip when preset limits are exceeded.

LI breakers are a combination of adjustable trip functions including long-time ampere rating, long-time delay, and instantaneous pickup. LSI breakers have all of the LI breaker features plus short-time pickup, short-time delay, and defeatable instantaneous pickup. LSIG breakers have all of the LSI breaker features plus ground-fault pickup and delay.

Electronic with Ground Fault Trip

The ground fault trip feature is referred to as LSIG in this document. Models with LSIG compare current flow in phase and neutral lines, and trip when current unbalance exists.

Ground fault trip units are an integral part of the circuit breaker and are not available as field-installable kits. The ground fault pickup switch sets the current level at which the circuit breaker will trip after the ground fault delay. Ground fault pickup values are based on circuit breaker sensor plug only and not on the rating plug multiplier. Changing the rating plug multiplier has no effect on the ground fault pickup values.

80% Rated Circuit Breaker

Most molded-case circuit breakers are 80% rated devices. An 80% rated circuit breaker can only be applied at 80% of its rating for continuous loads as defined by NFPA 70. Circuit conductors used with 80% rated circuit breakers are required to be rated for 100% of the circuit breaker's rating.

The 80% rated circuit breakers are typically at a lower cost than the 100% rated circuit breaker but load growth is limited.

100% Rated Circuit Breaker

Applications where all UL and NEC restrictions are met can use 100% rated circuit breakers where 100% rated circuits can carry 100% of the circuit breaker and conductor current rating.

The 100% rated circuit breakers are typically at a higher cost than the 80% rated circuit breaker but have load growth possibilities.

When applying 100% rated circuit breakers, comply with the various restrictions including UL Standard 489 and NEC Section 210. If any of the 100% rated circuit breaker restrictions are not met, the circuit breaker becomes an 80% rated circuit breaker.

Line Circuit Breaker Options

❑ Alarm Switch

The alarm switch indicates that the circuit breaker is in a tripped position caused by an overload, short circuit, ground fault, the operation of the shunt trip, an undervoltage trip, or the push-to-trip pushbutton. The alarm resets when the circuit breaker is reset.

❑ Auxiliary Contacts

These switches send a signal indicating whether the main circuit breaker contacts are in the open or closed position.

❑ Breaker Separators (350- 2500 kW)

Provides adequate clearance between breaker circuits.

❑ Bus Bars

Bus bar kits offer a convenient way to connect load leads to the generator set when a circuit breaker is not present.
15- 300 kW. Bus bar kits are available on alternators with leads for connection to the generator set when circuit breakers are not ordered.
350- 2500 kW. A bus bar kit is provided when no circuit breaker is ordered. Bus bars are also available in combination with circuit breakers or other bus bars on the opposite side of the junction box. On medium voltage (3.3 kV and above) units, a bus bar kit is standard (not applicable to KD models).

❑ Field Connection Barrier

Provides installer wiring isolation from factory connections.

❑ Ground Fault Annunciation

A relay contact for customer connection indicates a ground fault condition and is part of a ground fault alarm.

❑ Lockout Device (padlock attachment)

This field-installable handle padlock attachment is available for manually operated circuit breakers. The attachment can accommodate three padlocks and will lock the circuit breaker in the OFF position only.

❑ Lugs

Various lug sizes are available to accommodate multiple cable sizes for connection to the neutral or bus bar.

❑ Overcurrent Trip Switch

The overcurrent trip switch indicates that the circuit breaker has tripped due to overload, ground fault, or short circuit and returns to the deenergized state when the circuit breaker is reset.

❑ Shunt Trip, 12 VDC or 24 VDC

A shunt trip option provides a solenoid within the circuit breaker case that, when momentarily energized from a remote source, activates the trip mechanism. This feature allows the circuit breaker to be tripped by customer-selected faults such as alternator overload or overspeed. The circuit breaker must be reset locally after being tripped. Tripping has priority over manual or motor operator closing.

❑ Shunt Trip Wiring

Connects the shunt trip to the generator set controller. (standard on KD models with the APM802 controller)

❑ Undervoltage Trip, 12 VDC or 24 VDC

The undervoltage trips the circuit breaker when the control voltage drops below the preset threshold of 35%- 70% of the rated voltage.

15- 300* kW Line Circuit Breaker Specifications

* Includes models 300REOZJ and 300REZXC. For other 300 kW models, see the 350- 2250 kW section.

80% Rating Circuit Breaker

Alt. Model	Ampere Range	Trip Type	C. B. Frame Size
4D/4E	15- 150	Thermal magnetic	HD
	60- 150	Electronic LI	
		Electronic LSI	
		Electronic LSIG	
	60- 150	Electronic LI	HG
		Electronic LSI	
		Electronic LSIG	
4P/4PX/ 4Q/4QX	30- 100	Magnetic, UL 1077	E (480 V max.)
		Magnetic, UL 1077 with 12 V shunt trip	
		Magnetic, UL 1077 with 24 V shunt trip	
	15- 150	Thermal magnetic	HD
	60- 150	Electronic LI	
		Electronic LSI	
		Electronic LSIG	
	60- 150	Electronic LI	HG
		Electronic LSI	
		Electronic LSIG	
	30	Magnetic 9- 325	HJ
	50	Magnetic 84- 546	
	100	Magnetic 180- 1040	
	150	Magnetic 348- 1690	
	175- 250	Thermal magnetic	JD
	250	Electronic LI	
		Electronic LSI	
		Electronic LSIG	
	250	Electronic LI	JG
		Electronic LSI	
		Electronic LSIG	
	250	Magnetic only 684- 2500	JJ
	300- 400	Thermal magnetic	LA
	400	Magnetic 500- 1000	LA
		Magnetic 750- 1600	
		Magnetic 1000- 2000	
		Magnetic 1125- 2250	
		Magnetic 1250- 2500	
		Magnetic1500- 3000	
		Magnetic 1750- 3500	
		Magnetic 2000- 4000	
	400	Electronic LI	LG
		Electronic LSI	
		Electronic LSIG	
4RX 4S/4SX 4TX 4V	30- 100	Magnetic, UL 1077	E (480 V max.)
		Magnetic, UL 1077 with 12 V shunt trip	
		Magnetic, UL 1077 with 24 V shunt trip	

Alt. Model	Ampere Range	Trip Type	C. B. Frame Size
4RX 4S/4SX 4TX/4V 4UA 4M6226	15- 150	Thermal magnetic	HD
	60- 150	Electronic LI	
		Electronic LSI	
		Electronic LSIG	
	60- 150	Electronic LI	HG
		Electronic LSI	
		Electronic LSIG	
	30	Magnetic 9- 325	HJ
	50	Magnetic 84- 546	
	100	Magnetic 180- 1040	
	150	Magnetic 348- 1690	
	175- 250	Thermal magnetic	JD
	250	Electronic LI	
		Electronic LSI	
		Electronic LSIG	
	250	Electronic LI	JG
		Electronic LSI	
		Electronic LSIG	
	250	Magnetic only 684- 2500	JJ
	300- 400	Thermal magnetic	LA
	400	Magnetic 500- 1000	LA
		Magnetic 750- 1600	
		Magnetic 1000- 2000	
		Magnetic 1125- 2250	
		Magnetic 1250- 2500	
		Magnetic1500- 3000	
		Magnetic 1750- 3500	
		Magnetic 2000- 4000	
	400- 600	Electronic LI	LG
		Electronic LSI	
		Electronic LSIG	
	800	Electronic LSI	PG
		Electronic LSIG	
	700- 800	Thermal magnetic	MG
4UA 4M6226	1000- 1200	Thermal magnetic	PG
		Electronic LSI	
		Electronic LSIG	
	1200	Thermal Magnetic	PJ
		Electronic LSI	
		Electronic LSIG	

15- 300* kW Line Circuit Breaker Specifications

* Includes models 300REOZJ and 300REZXC. For other 300 kW models, see the 300- 2250 kW section.

100% Rating Circuit Breaker

Alt. Model	Ampere Range	Trip Type	C. B. Frame Size
4D/4E	15- 150	Thermal magnetic	HD
	60- 150	Electronic LI	
		Electronic LSI	
		Electronic LSIG	
	60- 150	Electronic LI	HG
		Electronic LSI	
		Electronic LSIG	
4P/4PX 4Q/4QX	15- 150	Thermal magnetic	HD
	60- 150	Electronic LI	
		Electronic LSI	
		Electronic LSIG	
	60- 150	Electronic LI	HG
		Electronic LSI	
		Electronic LSIG	
	175- 250	Thermal magnetic	JD
	250	Electronic LI	JD
		Electronic LSI	
		Electronic LSIG	
	250	Electronic LI	JG
		Electronic LSI	
		Electronic LSIG	
	400	Electronic LI	LG
		Electronic LSI	
		Electronic LSIG	
4RX 4S/4SX 4TX 4V 4UA 4M6226	15- 150	Thermal magnetic	HD
	60- 150	Electronic LI	
		Electronic LSI	
		Electronic LSIG	
	60- 150	Electronic LI	HG
		Electronic LSI	
		Electronic LSIG	
	175- 250	Thermal magnetic	JD
	250	Electronic LI	
		Electronic LSI	
		Electronic LSIG	
	250	Electronic LI	JG
		Electronic LSI	
		Electronic LSIG	
	400	Electronic LI	LG
		Electronic LSI	
		Electronic LSIG	
	600- 800	Electronic LSI	PG
		Electronic LSIG	
4UA 4M6226	1000- 1200	Electronic LSI	PG
		Electronic LSIG	
	1200	Electronic LSI	PJ
		Electronic LSIG	

100% Rating Electrically Operated Breakers

For use as paralleling breakers with the Decision-Maker® 6000 Controller/DPS System or APM603 controller.

Generator-Mounted P-Frame, 24VDC Electrically Operated			
Alt. Model	Amps	Trip Unit	Frame
4RX 4S/4SX 4TX 4V	250 400 600 800	3.0 LI	PJ
		5.0 LSI	PJ
		3.0 LI	PL
		5.0 LSI	PL
4UA 4M6226	250 400 600 800 1000 1200	3.0 LI	PJ
		5.0 LSI	PJ
		3.0 LI	PL
		5.0 LSI	PL

All circuit breakers listed in this table include line side bus and load side lugs, 24VDC motor operators, 2 type C auxiliary contacts, and 1 type C SDE overcurrent switch contact. No second breakers are allowed in combination with these breakers.

Interrupting Ratings

Circuit Breaker Frame Size	240 Volt, kA	480 Volt, kA	600 Volt, kA
HD	25	18	14
HG	65	35	18
HJ	100	65	25
JD	25	18	14
JG	65	35	18
JJ	100	65	25
LA	42	30	22
LG	65	35	18
MG			
PG	65	35	18
PJ	100	65	25
PL	125	100	25

Circuit Breaker Lugs Per Phase (Al/Cu)

Frame Size	Ampere Range	Wire Range
E (480 V max.)	30- 100	Up to two wire terminals fitting 10-32 or 1/4-20 stud
H	15- 150	One #14 to 3/0
J	175	One 1/0 to 4/0
	200- 250	One 3/0 to 350 kcmil
LA	300- 400	One #1 to 600 kcmil or Two #1 to 250 kcmil
LG	400- 600	Two 2/0 to 500 kcmil AL/CU
M	700-800	Three 3/0 to 500 kcmil
P	600-800	Three 3/0 to 500 kcmil
	1000-1200	Four 3/0 to 500 kcmil
Mechanical Load Lugs Included with H, J, and LG LSIG Neutrals		
H	60- 150	One #14 to 3/0 AL/CU
J	250	One 3/0 to 350 kcmil AL/CU
LG	400- 600	Two 4/0 to 500 kcmil AL/CU

15- 300* kW Line Circuit Breaker Applications

* Includes models 300REOZJ and 300REZXC. For other 300 kW models, see the 300- 2250 kW section.

Single Circuit Breaker Installations

A generator set with a single circuit breaker installed typically feeds a single transfer switch and then a distribution panel. This allows protection of the entire system.

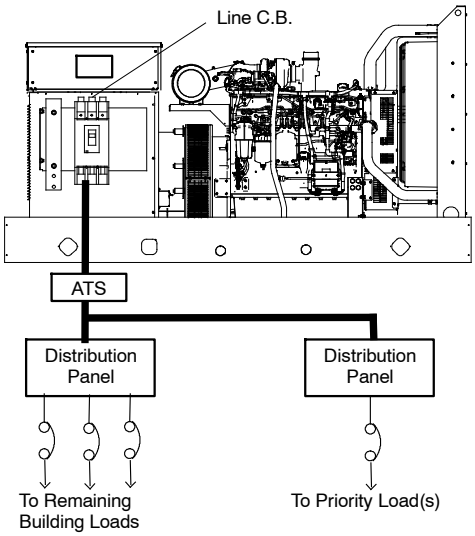

Single line circuit breaker configuration where circuit breaker can trip causing all power to building loads including priority load to be disrupted.

Multiple Circuit Breaker Installations

A generator set with dual circuit breakers installed is used to separate critical loads. Typically, one circuit breaker will feed a main transfer switch with noncritical loads and the other circuit breaker will feed a second transfer switch that feeds critical or priority loads. Multiple circuit breakers allow circuit protection for special applications.

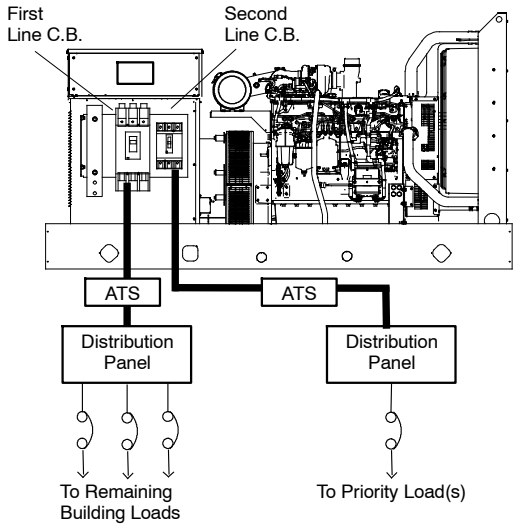

Dual line circuit breaker configuration where first circuit breaker can trip allowing second circuit breaker to continue supplying power to priority load(s).

Circuit Breaker Combinations

Alternator Model	First C. B. Frame	Second C. B. Frame	Third C. B. Frame	Trip Type
ALL except 4D/4E	H	—	—	All
	J	—	—	
	LA	—	—	
	LG	—	—	
4D/4E	H	—	—	Standard or LSIG
	H	H	—	No LSIG
4P/4PX 4Q/4QX	H	H or J	—	No LSIG
	J		—	
	LA		—	
	LG	H, J or LG	—	
4RX 4S/4SX 4TX 4V	M	—	—	All
	P	—	—	All
	H or J	H or J	—	No LSIG
	LA	H, J, or LA	—	
	LG	H, J, LA, or LG	—	
	M			
	P			
	H or J	H or J	H or J	
4UA 4M6226	M or P	—	—	All
	H or J	H or J	—	All
	LA	H, J, or LA	—	
	LG	H, J, LA, or LG	—	
	M or P	H, J, LA, or LG	—	
	P	P	—	No LSIG
	H or J	H or J	H or J	
	LA	H or J	H or J	
		LA	H, J, or LA	
	LG	H or J	H or J	
		LA	H, J, or LA	
		LG	H, J, LA, or LG	
	M or P	H or J	H or J	
		LA	H, J, or LA	
		LG	H, J, or LG	

MAIN BREAKER = 400A
LOAD BANK BREAKER = 400A

KOHLER. Power Systems

Enclosed Circuit Breakers

The following loose circuit breakers are available in NEMA 1 or NEMA 3R enclosures for remote mounting.

80% Rating Circuit Breakers

Ampere Range	Trip Type	C. B. Frame Size
15- 150	Thermal Magnetic	HD
60- 150	Electronic LI	HD
	Electronic LSI	
175- 250	Thermal Magnetic	JD
250	Electronic LI	
	Electronic LSI	
60- 150	Electronic LI	HG
	Electronic LSI	
250	Electronic LI	JG
	Electronic LSI	
30	9- 325 A. Mag. Trip	HJ
50	84- 546 A. Mag. Trip	
100	180- 1040 A. Mag. Trip	
150	348- 1690 A. Mag. Trip	
250	684- 2500 A. Mag. Trip	JJ
300- 400	Thermal Magnetic	LA
400	500- 1000 A. Mag. Trip	
	750- 1600 A. Mag. Trip	
	1000- 2000 A. Mag. Trip	
	1125- 2250 A. Mag. Trip	
	1250- 2500 A. Mag. Trip	
	1500- 3000 A. Mag. Trip	
	1750- 3500 A. Mag. Trip	
	2000- 4000 A. Mag. Trip	
400- 600	Electronic LI	LG
	Electronic LSI	
700- 800	Thermal Magnetic	MG
1000- 1200	Thermal Magnetic	PG
800- 1200	Electronic LSI	
1200	Thermal Magnetic	PJ
	Electronic LSI	

100% Rating Circuit Breakers

Ampere Range	Trip Type	C. B. Frame Size
15- 150	Thermal Magnetic	HD
60- 150	Electronic LI	
	Electronic LSI	
175- 250	Thermal Magnetic	JD
250	Electronic LI	
	Electronic LSI	
60- 150	Electronic LI	HG
	Electronic LSI	
250	Electronic LI	JG
	Electronic LSI	
400	Electronic LI	LG
	Electronic LSI	
600- 800	Electronic LSI	PG
	Electronic LSIG	

Circuit Breaker Lugs Per Phase (Al/Cu)

Frame Size	Ampere Range	Wire Range
H	15- 150	One #14 to 3/0
J	175	One #4 to 4/0
	200- 250	One 3/0 to 350 kcmil
LA	300	One #1 to 600 kcmil
		Two #1 to 250 kcmil
LG	250	One #2 to 500 kcmil
	400- 600	Two 2/0 to 500 kcmil
M	300-800	Three 3/0 to 500 kcmil
P	250-800	Three 3/0 to 500 kcmil
	1000-1200	Four 3/0 to 500 kcmil

Accessories

Accessory	Breaker Frame
Auxiliary Contacts	H, J, LA, LG, M, P
Shunt Trip 12VDC	H, J, LA, LG, M, P
Shunt Trip 24VDC	H, J, LA, LG, M, P
Undervoltage Trip 12VDC	H, J, LA, LG, M, P
Undervoltage Trip 24VDC	H, J, LA, LG, M, P
Alarm Switch	H, J, LA, LG, M, P
Overcurrent Switch	H, J, LA, LG, M, P

Note: LA frame accepts a maximum combination of (2) internal accessories (not including padlock attachment)

Enclosed Circuit Breakers

Enclosure Specifications

Frame Size	Dimensions, L x W x H, mm (in.)	
	NEMA 1	NEMA 3R
H, J	365 x 156 x 797 (14.4 x 6.2 x 31.4)	374 x 156* x 820 (14.8 x 6.2* x 32.3)
LA	388 x 165* x 1130 (15.3 x 6.5* x 44.5)	391 x 200* x 1118 (15.4 X 7.9* X 44.0)
LG †	519 x 293 x 1515 (20.4 x 11.5 x 59.6)	519 x 293 x 1515 (20.4 x 11.5 x 59.6)
M, P	533 x 248 x 1324 (21.0 x 9.58 x 52.1)	533 x 309 x 1324 (21.0 x 12.2 x 52.1)

* Width does not include circuit breaker operating handle.

† Enclosures accept 80% rated L- frame circuit breakers 600A max OR 100% rated L-frame circuit breakers 400A max.

Solid Neutral Assemblies and Ground Kits

Frame Size	Neutral or Ground	Maximum Ampere Rating	Terminals	Conductors per Terminal	Wire Size	Type
H, J	Neutral	100	2	1	#14 to 1/0	CU
					#12 to 1/0	AL
	Neutral	250	2	1 or 2	#1 to 600 #1 to 250	AL or CU
			2	1	#4 to 300	AL or CU
	Ground	250	2	1	#6 to 300	AL or CU
LA	Neutral	400	2	1 or 2	#1 to 600	AL or CU
			2	1 or 2	#1 to 250	AL or CU
	Ground	—	2	1	#10 to 2/0	CU
			2	1	#6 to 2/0	AL
LG	Neutral	200- 1000	2	3	3/0 to 500	AL or CU
	Ground	—	4	1	#6 to 250	AL or CU
M, P	Neutral	1200	8 (4 in, 4 out)	1	3/0 to 500	AL or CU
				2	#6 to 350	AL or CU
	Ground	—	4	1	#6 to 300	AL or CU

KOHLER®

KOHLER CO., Kohler, Wisconsin 53044 USA
Phone 920-457-4441, Fax 920-459-1646
For the nearest sales and service outlet in the US and Canada, phone 1-800-544-2444
KOHLERPower.com

Enclosed Circuit Breakers and Fused Disconnect Switches

The following loose circuit breakers and fused disconnect switches are available in NEMA 1 enclosures for remote mounting.

100% Rating 3P Circuit Breakers, 2500- 3250 kW

Amps	Trip Type	Volts	Hz	kW	Approvals
3000	Electronic LI	600	60	2500	UL891
4000		780	60	2500	UL891
4000		600	60	2800/ 3000/ 3250	UL891
5000		380	50	2500/ 2800/ 3250	IEC
5000		480	60	2800/ 3000/ 3250	IEC
3000	Electronic LSIG	600	60	2500	UL891
4000		480	60	2500	UL891
4000		600	60	2800/ 3000/ 3250	UL891
5000		380	50	2500/ 2800/ 3250	IEC
5000		480	60	2800/ 3000/ 3250	IEC

NEMA 1 Enclosure Specifications, Breakers

Size	Dimensions, L x W x H, mm (in.)	
	mm	in.
3000 A	914.4 x 914.4 x 2324	36 x 36 x 91.5
4000 A	1219 x 1067 x 2324	48 x 42 x 91.5
5000 A	1219 x 1219 x 2324	48 x 48 x 91.5

Fused Disconnect Switches 50/60 Hz, HVL-CC Switch, UL and IEC

Amps	Trip Type	Poles	Accessories
200 400 600	Fuse	3P	None
			3 Auxiliary Contacts
			3 Auxiliary Contacts and Blown Fuse Indicator
			3 Auxiliary Contacts, Blown Fuse Indicator, and Protective Relay

NEMA 1 Enclosure Specifications, Fused Disconnect Switches

Size	Dimensions, L x W x H, mm (in.)	
	mm	in.
13.8 kV	946 x 749 x 2591 *	37.25 x 29.5 x 102
4160 V	946 x 883 x 2591 *	37.25 x 34.75 x 102
* Height includes pull box.		

DISTRIBUTED BY:

Availability is subject to change without notice. Kohler Co. reserves the right to change the design or specifications without notice and without any obligation or liability whatsoever. Contact your local Kohler® generator set distributor for availability.

KOHLER. Power Systems

PowerPact™ H-, J-, and L-Frame Circuit Breakers
Trip Curves

Figure 96: Micrologic 3.3S and 3.3S-W Electronic Trip Unit Long Time/Short Time Trip Curve

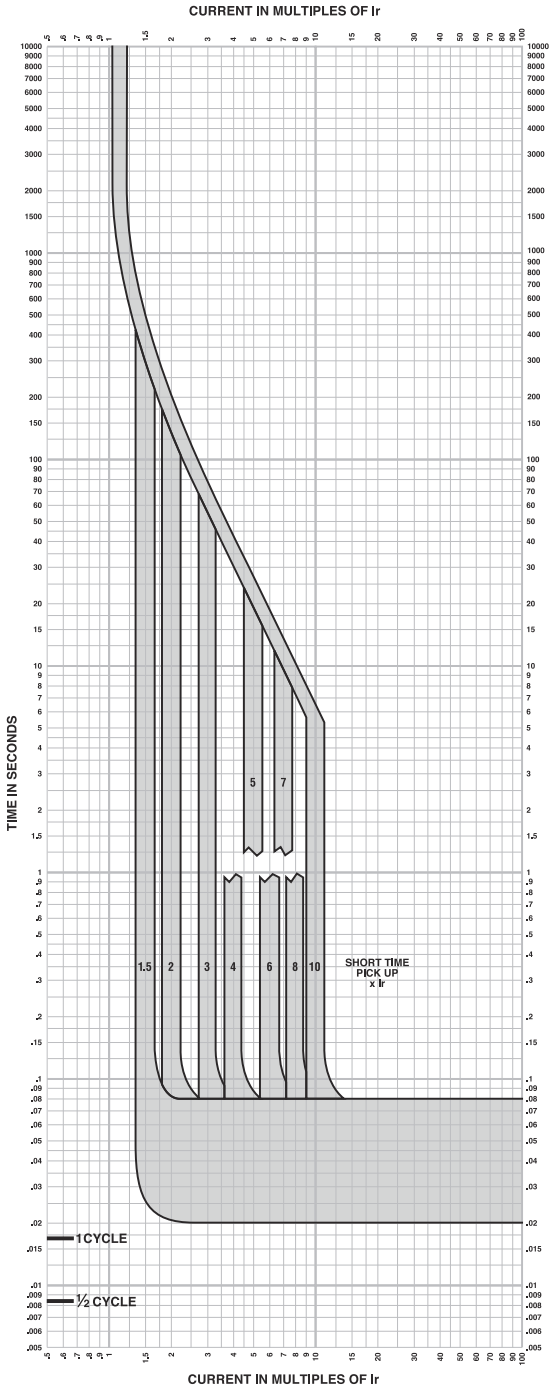

MICROLOGIC™ ELECTRONIC TRIP UNITS
Micrologic™ 3.3S and 3.3S-W
Long Time/Short Time Trip Curve
250A, 400A L-Frame

The time-current curve information is to be used for application and coordination purposes only.

Notes:

1. There is a thermal-imaging effect that can act to shorten the long-time delay. The thermal imaging effect comes into play if a current above the long-time delay pickup value exists for a time and then is cleared by the tripping of a downstream device or the circuit breaker itself. A subsequent overload will cause the circuit breaker to trip in a shorter time than normal. The amount of time delay reduction is inverse to the amount of time that has elapsed since the previous overload. Approximately 20 minutes is required between overloads to completely reset thermal-imaging.
2. Total clearing times shown include the response times of the trip unit, the circuit breaker opening, and the extinction of the current.

Curves apply from -35ºC to +70ºC (-31ºF to +158ºF) ambient temperature.

PowerPact™ H-, J-, and L-Frame Circuit Breakers
Trip Curves

Figure 104: Micrologic 3.3S and 3.3S-W Electronic Trip Unit Long Time/Short Time Trip Curve

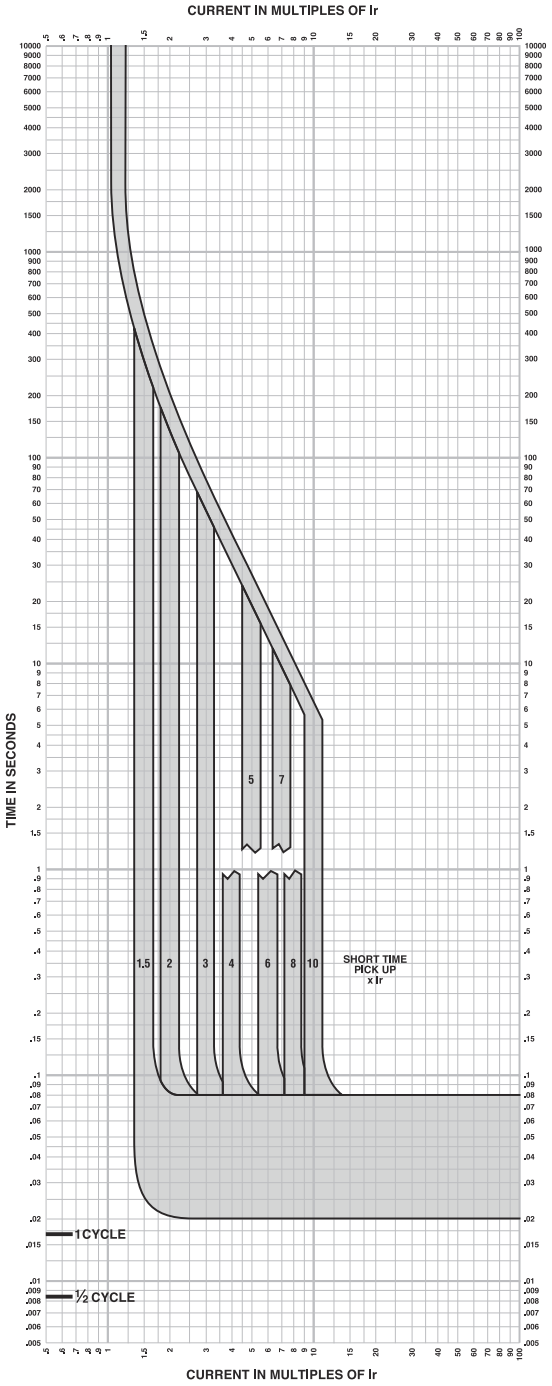

MICROLOGIC™ ELECTRONIC TRIP UNITS
Micrologic™ 3.3S and 3.3S-W
Long Time/Short Time Trip Curve
600A L-Frame

The time-current curve information is to be used for application and coordination purposes only.

Notes:

1. There is a thermal-imaging effect that can act to shorten the long-time delay. The thermal imaging effect comes into play if a current above the long-time delay pickup value exists for a time and then is cleared by the tripping of a downstream device or the circuit breaker itself. A subsequent overload will cause the circuit breaker to trip in a shorter time than normal. The amount of time delay reduction is inverse to the amount of time that has elapsed since the previous overload. Approximately 20 minutes is required between overloads to completely reset thermal-imaging.
2. Total clearing times shown include the response times of the trip unit, the circuit breaker opening, and the extinction of the current.

Curves apply from -35ºC to +70ºC (-31ºF to +158ºF) ambient temperature.

KOHLER®

Industrial Generator Set Accessories

Engine Block Heater Kits

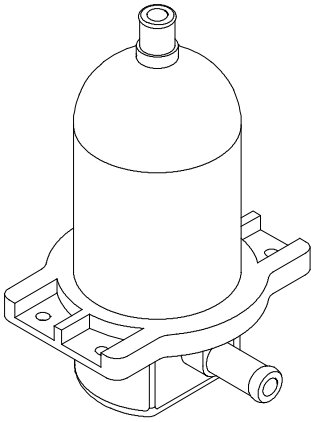

Block Heater Kit, typical

Applicable Models

- KG40- KG125
- KG150- KG200
- KG150R
- 25- 45REZG
- 25- 60REZGB
- 50REZGC/125REZGC/150REZGC
- 50- 60REOZJD
- 50REOZJE
- 80REZGD/100REZGD
- 80RZGD/100RZGD
- 80- 200REOZJF
- 80- 150REOZJG4
- 125RZGC/150RZGC
- 125REOZJG/180REOZJG

Standard Features

- UL- C/US listed
- CE compliant
- Controls for automatic operation
- Compact design
- Easy to install

Description

The engine block heater kit heats the engine coolant in cold ambient, warming the cylinders, oil, and charge air circuit which all help to give a faster starting time. The engine block heater uses thermosiphon action to circulate warm coolant into the engine and supplies constant heating to the engine. The engine block heater kit helps to extend element life and gives a significant reduction in electrical consumption.

The engine block heater kit is recommended for ambient temperatures below 10°C (50°F).

The engine block heater kits are available in 120 V, 240 V, and 277 V versions.

Block Heater Specifications

Heating Fluid	Water, Coolant Mix (50% Glycol/50% Water)
Max. Pressure	90 psi (620 kPa)
Heating Element Material	Incoloy 800
Inlet/Outlet Plumbing	0.625 in. hose barb
System Ingress	IP41
Power Connection	NEMA Plug and EURO Plug
Power Chord Length	48 in. (1219 mm)

Specifications

Block Heater Kit Number	Component	Watts	Voltage	Phase	Thermostat Temperature ON	Thermostat Temperature OFF
GM58098- KA1	358311	1000	120	1	27°C (80°F)	38°C (100°F)
GM75536- KA1	326228	1500	120	1	49°C (120°F)	60°C (140°F)
GM75555- KA5	GM75552	1800	120	1	27°C (80°F)	38°C (100°F)
GM75555- KA6	GM75553	2000	240	1		
GM75556- KA1	352945	1500	120	1		
GM75557- KA1	352945	1500	120	1		
GM75564- KA1	358311	1000	120	1		
GM75565- KA1	352945	1500	120	1		
GM77944- KA1	352945	1500	120	1		
GM77944- KA2	352946	1500	240	1		
GM85060- KA1	GM75552	1800	120	1		
GM85060- KA2	GM75553	2000	240	1		
GM89427- KA2	GM75552	1800	120	1		
GM91708- KA1	352945	1500	120	1		
GM94248- KA1	352945	1500	120	1		
GM104799- KA1	352945	1500	120	1		
GM105165- KA1	352945	1500	120	1		
GM105165- KA2	352946	1500	240	1		
GM105409- KA1	352945	1500	120	1		
GM105409- KA2	352946	1500	240	1		

Dimensions and Weights

Overall Size, H x W, mm (in):	199 x 122 (7.8 x 4.8)
Weight, kg (lb):	0.77 (1.7)

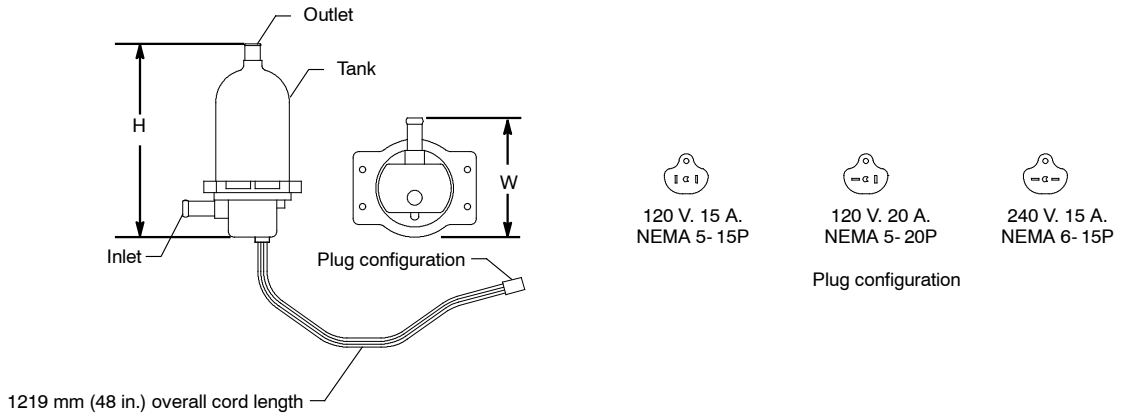

KOHLER CO., Kohler, Wisconsin 53044 USA
Phone 920-457-4441, Fax 920-459-1646
For the nearest sales and service outlet in the US and Canada, phone 1-800-544-2444
KOHLERPower.com

DISTRIBUTED BY:

Availability is subject to change without notice. Kohler Co. reserves the right to change the design or specifications without notice and without any obligation or liability whatsoever. Contact your local Kohler® generator distributor for availability.

G6-175 2/21a

KOHLER

Industrial Generator Set Accessories

12/24 Volt, 10 Amp
Automatic Multi-Stage Battery Charger

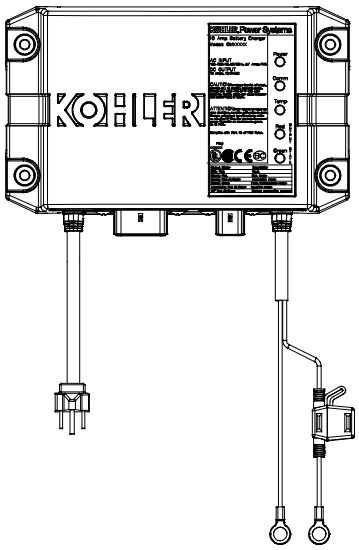

The battery charger is a fully-automatic, high efficiency battery charger that charges batteries rapidly and safely. The battery charger is designed for an industrial environment.

The battery charger is designed for operation with an engine cranking battery.

The battery charger is universal voltage input capable, comes with a standard 120 V/60 Hz AC plug, and charges 12 VDC or 24 VDC battery systems.

Five LED lights indicate power, communication status, temperature compensation status, charge curve, and charger status.

With the optional battery temperature sensor connected, the battery charger can adjust output voltages for optimal charging.

Standard Features

- 12 or 24 VDC output
  - Automatic voltage detection
- Automatic multi-stage charging modes
  - Recovery charge
  - Bulk charge
  - Absorption charge
  - Float charge
  - Equalize charge
- Charges the following type batteries:
  - Flooded lead acid (FLA)
  - AGM
  - Gel cell
  - High performance AGM
  - Nickel-cadmium (NiCad)
- 5 LED status indicators
- Durable potted assembly for waterproofing and vibration resistance
- Reverse-polarity protection
- Short-circuit protection
- Electronically limited output current
- Optional temperature compensation (FLA only)
- User adjustable parameters to support optimal manufacturer recommended charge curve.
- Code compliance:
  - UL 1236 Listed
  - NFPA 110, Level 1 compatible (when used with Kohler controller and connected to engine harness)
  - CSA - C22.2 No. 107.2-01
  - FCC - Title 47, Part 15 Class A
  - CE
  - IBC 2015
  - OSHPD

DC Output		AC Input		Overall Dimensions W x D x H	Shipping Weight	
Volts (Nominal)	Amps	Volts (Nominal)	Amps		kgs	lbs
12/24	10	100-260	3.7	253 mm x 152 mm x 74 mm (10.0 in x 6.0 in x 2.9 in)	3.6	7.9

G6-146 3/19c

KOHLER Power Systems

KOHLER CO., Kohler, Wisconsin 53044 USA
Phone 920-457-4441, Fax 920-459-1646
For the nearest sales and service outlet in the US and Canada, phone 1-800-544-2444
KOHLERPower.com

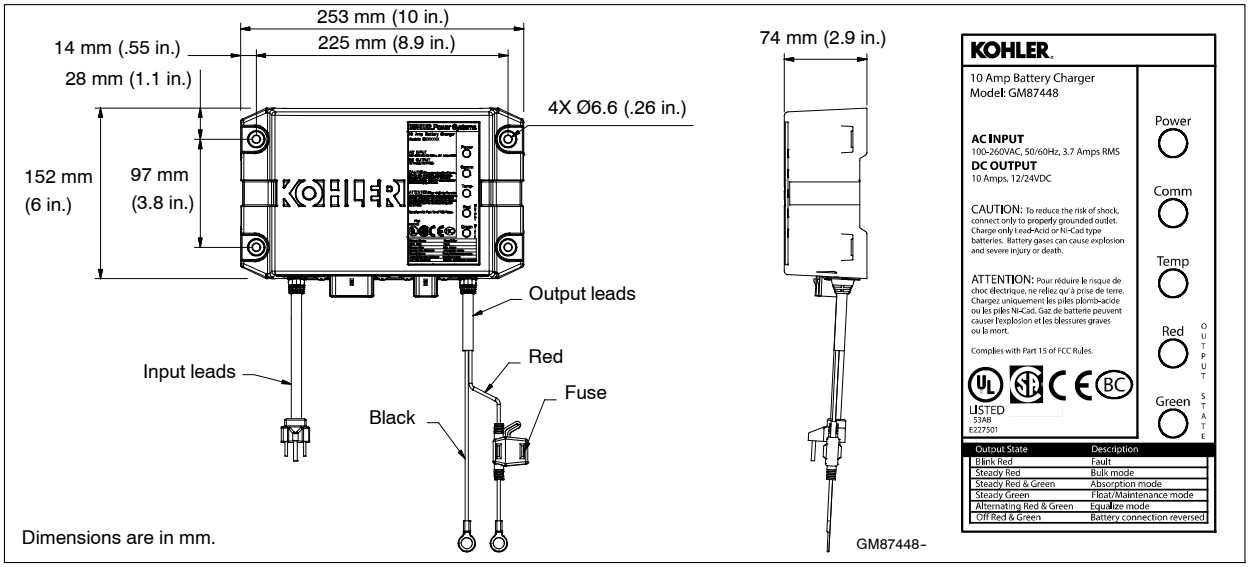

Specifications

AC Input	100–260 VAC
Frequency Input	50/60 Hz
DC Output	10 Amps @ 12 VDC or 10 Amps @ 24 VDC (On battery voltage regulation ±1%; current is electronically limited
Fuse Protection	15 amps ATC
Battery Types	Flooded Lead Acid (FLA) AGM Gel Cell High Performance AGM Nickel–Cadmium (NiCad)
Monitoring	
LED Indications	Power Communication Temperature compensation Output charger curve and charger status: ○ Red ○ Green
Environmental	
Operating	–20° to 70°C (–4° to 158° F)
Storage	–40° to 85°C (–40° to 185° F)
Relative Humidity	5 to 95% (non-condensing)
Salt Spray Testing	ASTM B117
Corrosion Resistant	From battery gases

Enclosure	
Environmental Resistant	From rain, snow, dust, and dripping water
Battery Connections	
Lead Length	1.8 m (6 ft.) red and black leads
Battery Connections	9.5 mm (3/8 in.) ring terminals
AC Power Connections	
Lead Length	1.8 m (6 ft.)
Storage	Standard US style 3-prong AC plug
Available Options	
Temperature compensation	

Availability is subject to change without notice. Kohler Co. reserves the right to change the design or specifications without notice and without any obligation or liability whatsoever. Contact your local Kohler® generator distributor for availability.

DISTRIBUTED BY:

G6-146 3/19c

KOHLER Power Systems

KOHLER®

Industrial Generator Set Accessories

System Batteries

- Kohler Co. selects batteries to meet the engine manufacturer's specifications and to comply with NFPA requirements for engine-cranking cycles.
- Heavy-duty starting batteries are the most cost-effective means of engine cranking and provide excellent reliability in generator set applications.
- Tough polypropylene cases protect against life-shortening vibration and impact damage.
- Batteries are rated according to SAE standard J-537.
- All batteries are 12 volts. Kits that contain two or four 12-volt batteries are available for 24-volt systems and/or systems with redundant starters.
- Wet- and dry-charged batteries have lead-calcium or lead-antimony plates and use sulfuric acid electrolyte. Removable cell covers allow checking of electrolyte specific gravity.
- Absorbent glass mat (AGM) batteries are sealed and maintenance-free.
- Batteries are for applications below and above 0°C (32°F).

Typical Overall Dimensions

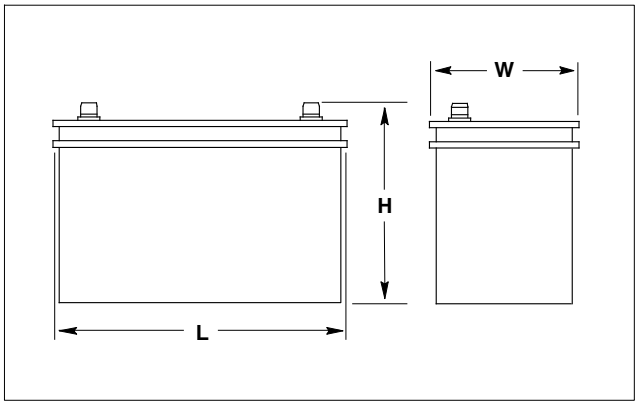

Battery Specifications

Battery Post Layouts (A/C/D) and Styles (1/3)

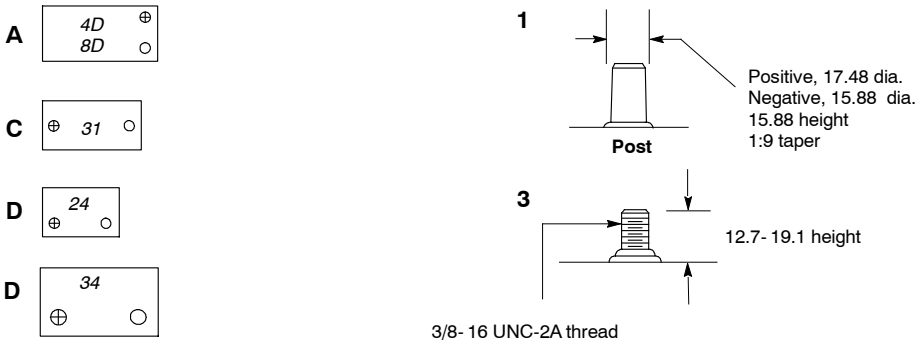

Notes: Dimensions are in mm; 25.4 mm equals 1 inch. BCI group numbers shown in italics.
Order stud kit 254427 to convert from Style 3 to Style 1.
Battery post layout letters and style numbers match drawing 244578 format.

KOHLER

KOHLER CO., Kohler, Wisconsin 53044 USA
Phone 920-457-4441, Fax 920-459-1646
For the nearest sales and service outlet in the US and Canada, phone 1-800-544-2444
KOHLERPower.com

System Battery Specifications

Battery Kit Number	Charge Type*	Battery Part Number	Battery Qty. per Kit	BCI Group Size	Battery SAE Dimensions, mm (in.) L	W	H	Cold Cranking Amps at -18°C (0°F) Minimum	Reserve Capacity Minutes at 27°C (80°F) Minimum	Battery Post Layout and Style
GM22297-KP1	Dry	GM22349	2	8D	527.1 (20.8)	282.4 (11.1)	276.4 (10.9)	1150	400	A/1
GM28546-KP1	Dry	GM22349	4	8D	527.1 (20.8)	282.4 (11.1)	276.4 (10.9)	1150	400	A/1
GM34404-KP1	Wet	GM34399	2	8D	527.1 (20.8)	282.4 (11.1)	276.4 (10.9)	1150	400	A/1
GM34405-KP1	Wet	GM34399	4	8D	527.1 (20.8)	282.4 (11.1)	276.4 (10.9)	1150	400	A/1
GM107815-KA1	Wet	GM106681	1	34	260.0 (10.3)	171.0 (6.7)	208.0 (8.2)	690	105	D/1
PA-225290, 255290	Dry	225289	1	24	273.0 (10.8)	173.0 (6.8)	228.6 (9.0)	650	130	D/1
PA-256985, 256985	Wet	256984	1	24	273.0 (10.8)	173.0 (6.8)	228.6 (9.0)	650	120	D/1
PA-324588, 324588	Wet	324586	2	31	330.2 (13.0)	173.0 (6.8)	239.8 (9.4)	950	185	C/3
PA-324589, 324589	Dry	324587	2	31	330.2 (13.0)	173.0 (6.8)	239.8 (9.4)	950	200	C/3
PA-336071, 336071	Wet	256984	2	24	273.0 (10.8)	173.0 (6.8)	228.6 (9.0)	650	120	D/1
PA-336692, 336692	Wet	324586	1	31	330.2 (13.0)	173.0 (6.8)	239.8 (9.4)	950	185	C/3
PA-354065, 354065	Wet	354147	4	31	330.2 (13.0)	173.0 (6.8)	239.8 (9.4)	700	170	C/3
10702002501-KA1	AGM	10702001800	2	4D	527.1 (20.8)	216.0 (8.5)	258.0 (10.2)	1110	380	A/1
10702002501-KA2	AGM	10702001800	4	4D	527.1 (20.8)	216.0 (8.5)	258.0 (10.2)	1110	380	A/1

* Charge type:
Dry-charged batteries do not contain electrolyte. Supply and add electrolyte per instructions enclosed with each kit.
Wet-charged batteries contain electrolyte and have removable covers.
AGM batteries are sealed and do not require added electrolyte.

NOTE: Battery kit numbers on the Price List may appear with PA- and (loose kit) and/or without PA- (installed kit) for some generator set models. Battery kit numbers with -KP are loose kits. Kit numbers with -KA are factory-installed.

NOTE: 10- 20REOD/REODB and 10- 20REOZD/REOZDB models: Service kit GM40633 may be required when the original battery is replaced. See Service Bulletin SB-658.

DISTRIBUTED BY:

Availability is subject to change without notice. Kohler Co. reserves the right to change the design or specifications without notice and without any obligation or liability whatsoever. Contact your local Kohler® generator set distributor for availability.

KOHLER®

Industrial Generator Set Accessories

Remote Serial Annunciator III (RSA III)

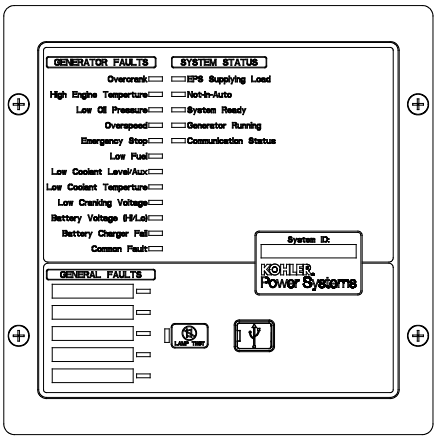

RSA III

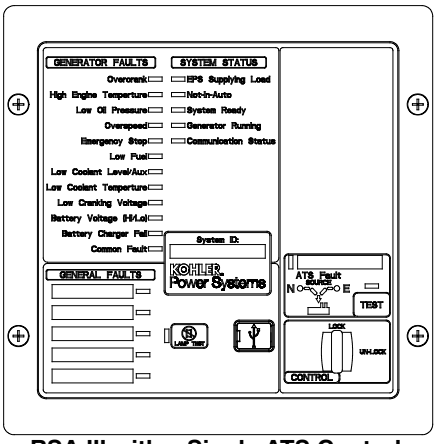

RSA III with a Single ATS Control

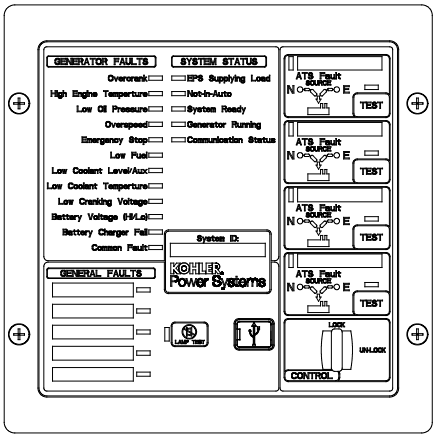

RSA III with Four ATS Controls

Remote Serial Annunciator III (RSA III) for Kohler® Controllers

- Monitors the generator set equipped with one of the following controllers:

APM402	Decision-Maker® 3000
APM603	Decision-Maker® 3500
APM802	Decision-Maker® 6000
Decision-Maker® 3+	Decision-Maker® 8000
Decision-Maker® 550	KPC 1000

- Allows monitoring of the common alarm, remote testing of the automatic transfer switch, and monitoring of the normal/emergency source for up to four ATS with any of the following controllers:
  - Decision-Maker® MPAC® 750, 1200, and 1500
  - MPAC® 1000 and 1500
- Configuration via a personal computer (PC) software.
- Writable surfaces (white boxes in illustrations) for user-defined selections.
- Uses Modbus® RTU protocol.
- Controller connections:
  - RS-485 for serial bus network
  - USB port. Connect a personal computer and use Kohler® SiteTech™ software to view events and adjust settings. *
  - 12-/24-volt DC power supply
  - 120/208 VAC power supply (available accessory)
- Meets the National Fire Protection Association Standard NFPA 110, Level 1.

Dimensions

- Dimensions—W x H x D, mm (in.).

  Surface Mounted:
  203 x 203 x 83 (8.0 x 8.0 x 3.3)

  Flush Mounted (Inside Wall):
  203 x 203 x 76 (8.0 x 8.0 x 3.0)
  Flush mounting plate W1: 254 (10.0)

* SiteTech™ software is available to Kohler authorized distributors and dealers.

Modbus® is a registered trademark of Schneider Electric.

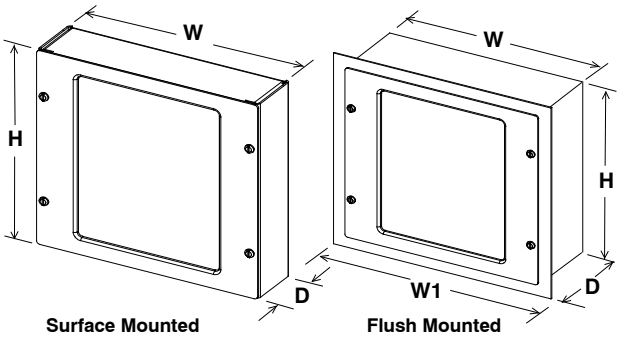

Surface Mounted Flush Mounted

G6-139 4/19c

Fault and Status Conditions	Fault LEDs	Fault Horn	System Ready LED	Generator Running LED	Communication Status LED
Overcrank Shutdown	Red	On	Red	Off	Green
High Engine Temperature Warning *	Yellow	On	Red	Green	Green
High Engine Temperature Shutdown	Red	On	Red	Off	Green
Low Oil Pressure Warning *	Yellow	On	Red	Green	Green
Low Oil Pressure Shutdown	Red	On	Red	Off	Green
Overspeed Shutdown	Red	On	Red	Off	Green
Emergency Stop *	Red	On	Red	Off	Green
Low Coolant Level/Aux. Shutdown	Red	On	Red	Off	Green
Low Coolant Temperature *	Yellow	On	Red	Off	Green
Low Cranking Voltage	Yellow	On	Red	Off	Green
Low Fuel—Level or Pressure *	Yellow	On	Red	Green or Off	Green
Not-In-Auto	Red	On	Red	Green or Off	Green
Common Fault	Red	On	Green	Green or Off	Green
Battery Charger Fault (1) *	Yellow	On	Red	Green or Off	Green
Battery Charger Fault (2) *	Yellow	On	Green	Green or Off	Green
High Battery Voltage *	Yellow	Off	Green	Green or Off	Green
Low Battery Voltage *	Yellow	Off	Green	Green or Off	Green
User Input #1 (Warning)	Yellow	Off	Green	Green or Off	Green
User Input #1 (Shutdown)	Red	On	Green	Off	Green
User Input #2 (Warning)	Yellow	Off	Green	Green or Off	Green
User Input #2 (Shutdown)	Red	On	Green	Off	Green
User Input #3 (Warning) (1) †	Yellow	Off	Green	Green or Off	Green
User Input #3 (Shutdown) (1) †	Red	On	Green	Off	Green
User Input #4 (Warning) (1)	Yellow	Off	Green	Green or Off	Green
User Input #4 (Shutdown) (1)	Red	On	Green	Off	Green
User Input #5 (Warning) (1)	Yellow	Off	Green	Green or Off	Green
User Input #5 (Shutdown) (1)	Red	On	Green	Off	Green
EPS Supplying Load	Yellow	Off	Green	Green	Green
Communications Status (Fault mode)	—	Off	Green or Red	Green or Off	Red
ATS Fault (RSA III with ATS Controls only)	Red	On	Red or Yellow	Green or Off	Green

Green LEDs appear as steady on when activated.
Yellow LEDs slow flash when activated except steady on with EPS supplying load and high battery voltage.
Red LEDs slow flash when activated except fast flash with loss of communication and not-in-auto.

Specifications

- LED indicating lights for status, warning, and/or shutdown.
- Power source with circuit protection: 12- or 24-volt DC
- Power source with120/208 VAC, 50/60 Hz adapter (option)
- Power draw: 200 mA
- Humidity range: 0% to 95% noncondensing
- Operating temperature range: -20°C to +70°C (-4°F to +158°F)
- Storage temperature range: -40°C to +85°C (-40°F to +185°F)
- Standards:
  - NFPA 110, level 1
  - UL 508 recognized
  - CE directive
  - NFPA 99
  - ENS 61000-4-4
  - EN6II-4-4 fast transient immunity
- RS-485 Modbus® isolated port @ 9.6/19.2/38.4/57.6 kbps (default is 19.2 kbps)
- USB device port
- NEMA 1 enclosure

(1) All generator set controllers except Decision-Maker® 3+ controller.
(2) Decision-Maker® 3+ controller only.
* May require optional kit or user-provided device to enable function and LED indication.
† Digital input #3 is factory-set for high battery voltage on the Decision-Maker® 3+ controller.
Modbus® is a registered trademark of Schneider Electric.

ATS Controls (RSA III with ATS controls only)

- ATS position LED (normal or emergency)
- Power source indicator LED (normal or emergency)
- ATS fault LED
- Key-operated lock/unlock switch for Test feature
- Test pushbutton

NFPA Requirements

- NFPA 110 compliant
- Engine functions:
  - High battery voltage warning *
  - High engine temperature shutdown
  - High engine temperature warning *
  - Low battery voltage warning *
  - Low coolant level/aux. shutdown
  - Low coolant temperature warning *
  - Low cranking voltage
  - Low fuel warning (level or pressure) *
  - Low oil pressure shutdown
  - Low oil pressure warning *
  - Overcrank shutdown
  - Overspeed shutdown
- General functions:
  - Audible alarm silence
  - Battery charger fault *
  - Lamp test
  - Master switch not-in-auto

Fault and Status LEDs and Lamp Test Switch

Alarm Horn. Horn sounds giving a minimum 90 dB at 0.1 m (0.3 ft.) audible alarm when a warning or shutdown fault condition exists except on high/low battery voltage or EPS supplying load.

Alarm Silenced. Red LED on lamp test switch lights when alarm horn is deactivated by alarm silence switch.

Alarm Silence Switch. Lamp test switch quiets the alarm during servicing. The horn will reactivate upon additional faults.

ATS Fault. Red LED lights when ATS fails to transfer.

Battery Charger Fail. LED lights if battery charger malfunctions. Requires battery charger with alarm contact.

Battery Voltage Hi/Lo. LED flashes if battery or charging voltage drops below preset level. LED lights steady if battery voltage exceeds preset level.

Common Fault. LED lights when a single or multiple common faults occur.

Communication Status. Green LED lights indicating annunciator communications functional. Red LED indicates communication fault.

EPS Supplying Load. LED lights when the Emergency Power System (EPS) generator set is supplying the load (APM402, APM603, APM802, and Decision-Maker® 550, 3000, 3500, 6000, and 8000 controllers) or when transfer switch is in the emergency position (Decision-Maker® 3+ controller).

Emergency Stop. LED lights and engine stops when emergency stop is made. May require a local emergency stop switch on some Decision-Maker® 3+ controllers.

Generator Running. LED lights when generator set is in operation.

High Engine Temperature. Red LED lights if engine has shut down because of high engine coolant temperature. Yellow LED lights if engine coolant temperature approaches shutdown range. Requires warning sender on some models.

Lamp Test (Switch). Switch tests all the annunciator indicator LEDs and horn.

Low Coolant Level/Aux. LED lights when engine coolant level is below acceptable range on radiator-mounted generator sets only. When used with a Decision-Maker® 3+ controller, the LED indicates low coolant level or an auxiliary fault shutdown. Requires user-supplied low coolant level switch on remote radiator models.

Low Coolant Temperature. LED lights if optional engine block heater malfunctions and/or engine coolant temperature is too low. Requires prealarm sender on some models.

Low Cranking Voltage. LED lights if battery voltage drops below preset level during engine cranking.

Low Fuel (Level or Pressure). LED lights if fuel level in tank approaches empty with diesel models or fuel pressure is low on gas models. Requires customer-supplied switch.

Low Oil Pressure. Red LED lights if generator set shuts down because of insufficient oil pressure. Yellow LED lights if engine oil pressure approaches shutdown range. Requires warning sender on some models.

Not In Auto. LED lights when the generator set controller is not set to automatic mode.

Overcrank. LED lights and cranking stops if engine does not start in either continuous cranking or cyclic cranking modes.

Overspeed. LED lights if generator set shuts down because of overspeed condition.

System Ready. Green LED lights when generator set master switch is in AUTO position and the system senses no faults. Red LED indicates system fault.

User-Defined Digital Inputs #1-#5. Monitors five digital auxiliary inputs (can be configured as warnings or shutdowns). User-defined digital inputs are selected via the RSA III master for local or remote (generator set or ATS). The user-defined digital input can be assigned via PC using SiteTech™ setup software.

KOHLER CO., Kohler, Wisconsin 53044 USA
Phone 920-457-4441, Fax 920-459-1646
For the nearest sales and service outlet in the US and Canada, phone 1-800-544-2444
KOHLERPower.com

Accessories

- ❑ Power source adapter kit 120/208 VAC, 50/60 Hz.
- ❑ Modbus®/Ethernet converter GM41143-KP2 for serial to Ethernet communication.
- ❑ Communication module GM32644-KA1 or GM32644-KP1 is required with Decision-Maker® 3+ controllers.

Modbus® is a registered trademark of Schneider Electric.

DISTRIBUTED BY:

Availability is subject to change without notice. Kohler Co. reserves the right to change the design or specifications without notice and without any obligation or liability whatsoever. Contact your local Kohler® generator set distributor for availability.

G6-139 4/19c

Industrial Generator Set Accessories

KOHLER®

Sound Enclosure with Subbase
Fuel Tank Package

ISO 9001 KOHLER POWER SYSTEMS NATIONALLY REGISTERED

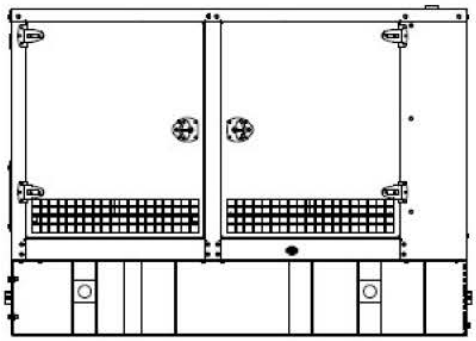

Enclosure with Standard Subbase Fuel Tank

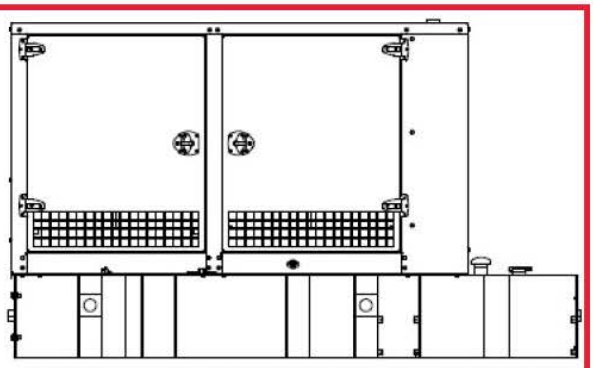

Enclosure with State Code Subbase Fuel Tank

Sound Enclosure Standard Features

- Internal-mounted critical silencer and flexible exhaust connector.
- Lift base-mounted or tank mounted steel construction with hinged doors.
- Fade-, scratch-, and corrosion-resistant Kohler® Power Armor automotive-grade textured finish.
- Power Armor surpasses 3,000-hour salt spray corrosion tests per ASTM B- 1117
- Enclosure has four access doors which allow for easy maintenance.
- Lockable, flush-mounted door latches.
- Vertical air inlet and outlet discharge to redirect air and reduce noise.
- Acoustic insulation that meets UL 94 HF1 flammability classification and repels moisture adsorption.
- Sound-attenuated that uses up to 51 mm (2 in.) of acoustic insulation.
- Steel sound enclosure is designed to 150 mph (241 kph) wind load rating.

Subbase Fuel Tank Features

- The fuel tank has a Power Armor Plus textured epoxy-based rubberized coating.
- The above-ground rectangular secondary containment tank mounts directly to the generator set, below the generator set skid (subbase).
- Both the inner and outer tanks have emergency relief vents.
- Flexible fuel lines are provided with subbase fuel tank selection.
- The secondary containment generator set base tank meets UL 142 tank requirements. The inner (primary) tank is sealed inside the outer (secondary) tank. The outer tank contains the fuel if the inner tank leaks or ruptures.
- State tanks with varying capacities are an available option. Florida Dept. of Environmental Protection (FDEP) File No. EQ-634 approved.

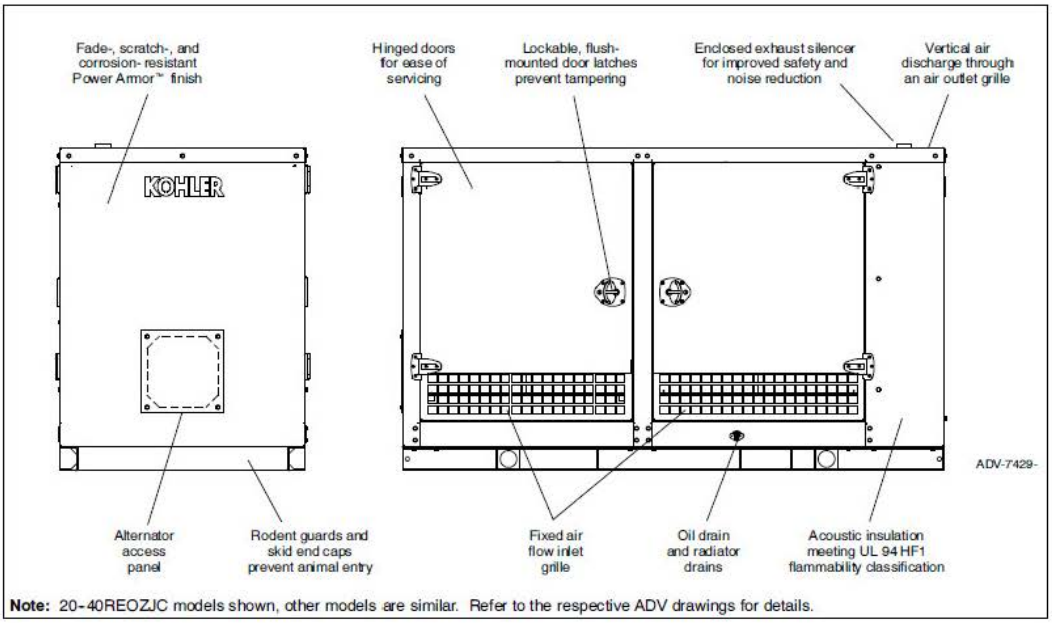

Sound Enclosure Features

- Available in steel (14 gauge) formed panel, solid construction. Preassembled package offering corrosion resistant, dent resilient structure mounting directly to lift base or fuel tank.
- Power Armor automotive-grade finish resulting in advanced corrosion and abrasion protection as well as enhanced edge coverage and color retention.
- Internal exhaust silencer offering maximum component life and operator safety.
- Interchangeable modular panel construction. Allows complete serviceability or replacement without compromising enclosure design.
- Cooling/combustion air intake with a horizontal air inlet. Sized for maximum cooling airflow.
- Service access. Multi-personnel doors for easy access to generator set control and servicing of the fuel fill, fuel gauge, oil fill and battery.
- Cooling air discharge. Weather protective design featuring vertical air discharge. Redirects cooling air up and above the enclosure to reduce ambient noise.
- Attenuated design. Acoustic insulation UL 94 HF1 listed for flame resistance offering up to 51 mm (2 in.) mechanically restrained acoustic insulation.
- Cooling air discharge. The sound enclosures include acoustic insulation with urethane film.
- Note: Installing an additional length of exhaust tail pipe may increase backpressure levels. Please refer to the generator set spec sheet for the maximum backpressure value.

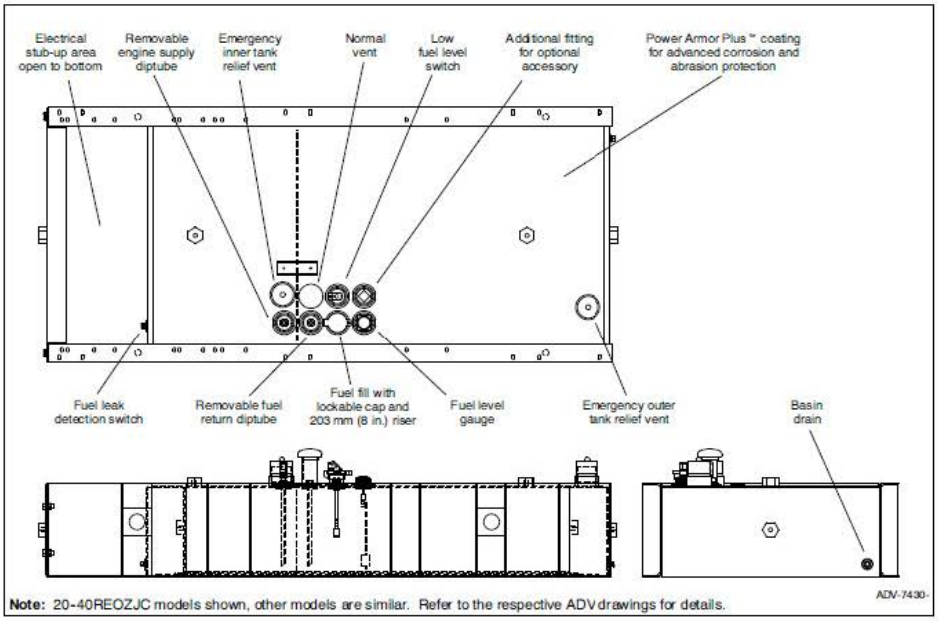

Note: 20-40REOZJC models shown, other models are similar. Refer to the respective ADV drawings for details.

- Extended operation. Usable tank capacities offers full load standby operation of up to 72 hours.
- Power Armor Plus textured epoxy-based rubberized coating that creates an ultra-thick barrier between the tank and harsh environmental conditions like humidity, saltwater, and extreme temperatures, and provides advanced corrosion and abrasion protection.
- UL listed. Secondary containment generator set base tank meeting UL 142 tank requirements.
- NFPA compliant. Designed to comply with the installation standards of NFPA 30 and NFPA 37.
- Integral external lift lugs. Enables crane with spreader-bar lifting of the complete package (empty tank, mounted generator set, and enclosure) to ensure safety.
- Emergency pressure relief vents. Meets UL requirements; ensures adequate venting of inner and outer tank under extreme pressure and/or emergency conditions.
- Normal vent with cap. Vent is raised above lockable fuel fill.
- Low fuel level switch. Annunciates a 50% low fuel level condition at generator set control.
- Leak detection switch. Annunciates a contained primary tank fuel leak condition at generator set control.
- Electrical stub-up.
- State tank designed to comply with the installation standards of the Florida Dept. of Environmental Protection (FDEP) File No. EQ-634.

Fuel Tank Capacity, L (gal.)	Est. Fuel Supply Hours at 60 Hz with Full Load	Enclosure and Fuel Tank Length, mm (in.)	Enclosure and Fuel Tank Width, mm (in.)	Enclosure and Fuel Tank Weight, kg (lb.)	Enclosure and Fuel Tank Height, mm (in.)	Fuel Tank Height (H), mm (in.)	Sound Pressure Level, dB(A)
814 (215)	24/31	3400 (133.9)	1156 (45.5)	1996 (4400)	2111 (83.1)	432 (17)	69

Note: Refer to the respective ADV drawings for details.
Note: Refer to TIB-114 for generator sound data.
Max. weight includes the generator set (wet), enclosure, silencer, and tank (no fuel). The generator set weight represents using the largest alternator option. The enclosure weight is with acoustic insulation added.

THIS PAGE INTENTIONALLY BLANK

SECTION THREE

GENSET TECHNICAL DATA

THIS PAGE INTENTIONALLY BLANK

KOHLER. Power Systems

JOHN DEERE

ENGINE PERFORMANCE CURVE

Rating: Gross Power
Application: Generator (60 Hz)
Target: 80 kWe Standby Market

PowerTech E™ 4.5L Engine
Model: **4045HF285**

121 hp (90 kW) Prime
133 hp (99 kW) Standby

[See Option Code Tables]

Nominal Engine Power @ 1800 RPM			
Prime		Standby	
HP	kW	HP	kW
121	90	133	99

Generator Efficiency %	Fan Power (6% of Standby)		Power Factor	Prime Rating [2]		Standby Rating [1,2]		ISO 8528 G2 Block Load Capability
	hp	kW		kWe	kVA	kWe	kVA	
88-92	7.0	5.2	0.8	75-78	94-98	83-86	104-108	100%

Note 1: Based on nominal engine power.
Note 2: kWe / kVA rating assumes 90% efficiency. "Generator Efficiency %" will vary.

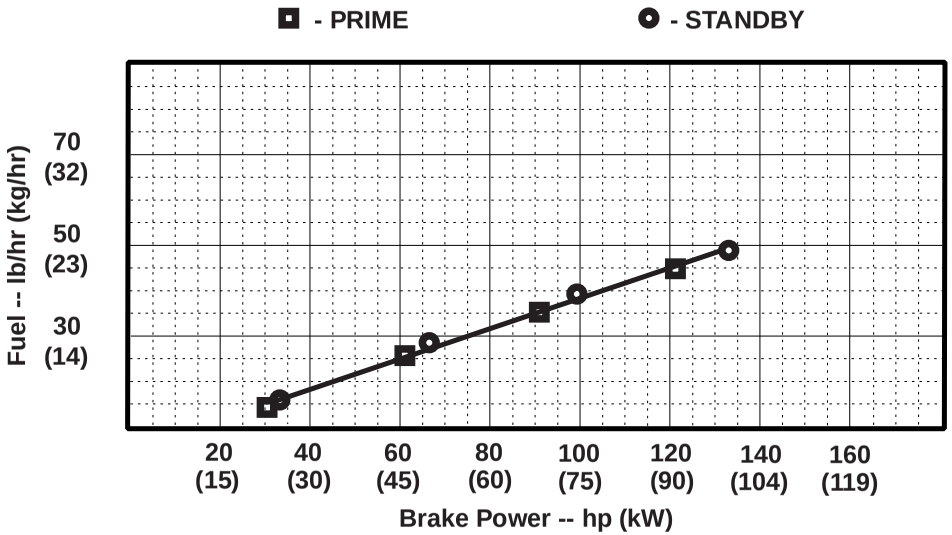

STANDARD CONDITIONS

Air Intake Restriction ..... 12 in.H_2O (3 kPa)
Exhaust Back Pressure ..... 30 in.H_2O (7.5 kPa)

Gross power guaranteed within + or - 5% at SAE J1995 and ISO 3046 conditions:
- 77 °F (25 °C) air inlet temperature
- 29.31 in.Hg (99 kPa) barometer
- 104 °F (40 °C) fuel inlet temperature
- 0.853 fuel specific gravity @ 60 °F (15.5 °C)

Conversion factors:
- Power: kW = hp x 0.746
- Fuel: 1 gal = 7.1 lb, 1 L = 0.85 kg
- Torque: N•m = lb-ft x 1.356

All values are from currently available data and are subject to change without notice.

Notes:
All OEM Gen Set Engine Applications must be pre-screened for torsional vibration compatibility with the respective alternator end hardware.

OEM Engine Application Engineering will perform this computer-based analysis work upon request.

Tier-3 Emission Certifications:	Certified by:
CARB; EPA Ref: Engine Emission Label	22 June '07

* Revised Data
Curve 4045HF2851800133 ..... Sheet 1 of 2
June 2007

ENGINE PERFORMANCE DATA

Engine Installation Criteria

General Data

Model 4045HF285
Number of Cylinders 4
Bore and Stroke--in. (mm)..... 4.19 x 5.00 (106 x 127)
Displacement--in.^{3} (L) 275 (4.5)
Compression Ratio 19.0:1
Valves per Cylinder--Intake/Exhaust.....1 / 1
Firing Order..... 1-3-4-2
Combustion System ..... Unit Injection
Engine Type .....In-line, 4-Cycle
Aspiration .....Turbocharged
Charge Air Cooling System.....Air-to-Air
Engine Crankcase Vent System ..... Open

Physical Data

Length--in. (mm) 33.9 (860)
Width--in. (mm) 24.1 (612)
Height--in. (mm) 40.9 (1039)
Weight, with oil--lb (kg).....1083 (491)
(Includes flywheel hsg., flywheel & electrics)
Center of Gravity Location (Estimated based on Tier 2)
From Rear Face of Block (X-axis)--in. (mm)...9.8 (249)
Right of Crankshaft (Y-axis)--in. (mm) 2.17 (55)
Above Crankshaft (Z-axis)--in. (mm) 5.7 (145)
Max. Allow. Static Bending Moment at Rear
Face of Flywhl Hsg w/ 5-G Load--lb-ft (N•m) ..600 (814)

Thrust Bearing Load Limit --lb (N)	Forward	Rearward
Intermittent	899 (4000)	450 (2000)
Continuous	495 (2200)	225 (1000)

Max. Front of Crank. Torsional Vibration--DDA.....0.25

Electrical System	12 Volt	24 Volt
Min. Battery Capacity (CCA)--amp	800	570
Max. Allow. Start. Circ't Resist.--Ohm	0.0012	0.002
Starter Rolling Current:		
At 32 °F (0 °C)--amp	920	600
At -22 °F (-30 °C)--amp	1300	700
Min. Volts at ECU while Cranking--volts	6	10
Max. ECU Temperature--°F (°C)	221 (105)	
Max. Harness Temperature--°F (°C)	248 (120)	
Maximum Voltage From Engine Crankshaft/ Generator Shaft to Ground--VAC	0.15	0.15

Air System	Prime	Standby
Max. Allowable Temp Rise--Ambient Air to Engine Inlet--°F (°C)	15 (8)	
Maximum Air Intake Restriction		
Dirty Air Cleaner--in.H_2O (kPa)	25 (6.25)	
Clean Air Cleaner--in.H_2O (kPa)	15 (3.75)	
Engine Air Flow--ft^3/min (m^3/min)	238 (6.73)	244 (6.9)
Air Cleaner Efficiency--%	99.9	

Charge Air Cooling System	Prime	Standby
Air/Air Exchanger Heat Rejection-- BTU/min (kW)	701(12.3)	768 (13.5)
Compress. Dischrg. Temp.(Rated) @ 77 °F (25°C) Amb. Air--°F (°C)	307(152.7)	326(163.2)
Compress. Dischrg. Temp.(Max.) @ 47°C amb. and 80 kPa bar.--°F (°C)	NA (NA)	NA (NA)
Press. Drop, thru CAC--in.H_2O (kPa)		
Max.	52 (13)	
Min.	None*	
Intake Manifold Pressure--psi (kPa)	17(114.3)	19(127.6)
CAC Out Temp @ 77°F (25°C) Amb.--°F (°C)		
Max.	140 (60)	
Min.	118 (48)	
CAC Out Temp @ any Ambient--°F (°C)		
Max.	190 (88)	

Cooling System	Prime	Standby
Engine Heat Reject.--BTU/min (kW)	NA(NA)	3096 (54.4)
Coolant Flow--gal/min (L/min)	41(157)	
Thermostat Start to Open--°F (°C)	180 (82)	
Thermostat Fully Open--°F (°C)	203 (95)	
Engine Coolant Capacity--qt (L)	9 (8.5)*	
Min. Pressure Cap--psi (kPa)	14.5 (100)	
Max. Top Tank Temp--°F (°C)	230 (110)	
Min. Coolant Fill Rate--gal/min (L/min)	3 (11)	
Min. Air-to-Boil Temperature--°F (°C)	117 (47)	
Min. Pump Inlet Pressure--psi (kPa)	4.4 (30)	

Exhaust System	Prime	Standby
Exhaust Flow--ft^3/min (m^3/min)	645 (18.3)	679(19.2)
Exhaust Temperature--°F (°C)	1024(551)	1074 (579)
Max. Exhaust Restriction----in. H_2O (kPa)	30 (7.5)	
Min. Exhaust Restriction----in. H_2O (kPa)	None	
Max. Bend. Moment, Turbo Out.--lb-ft (N•m)	5.2 (7.0)	
Max. Shear on Turbo Outlet--lb (kg)	24 (11)	

Fuel System	Prime	Standby
ECU Description	L16 Controller	
Fuel Injection Pump	Denso HP3	
Governor Type	Electronic	
Total Fuel Flow--lb/hr (kg/hr)	106(48.0)	117(53.0)
Fuel Consumption--lb/hr (kg/hr)	45(20)	49 (22)
Max. Fuel Inlet Temp.--°F (°C)	176 (80)	
Fuel Temp. Rise, Inlt to Retrn--°F (°C)	81.7(45)	81.9(46)
Max. Fuel Inlet Restriction--in. H_2O (kPa)	80 (20)	
Max. Fuel Inlet Pressure--in. H_2O (kPa)	NA (NA)	
Max. Fuel Return Pressure--in. H_2O (kPa)	80 (20)	

Lubrication System	Prime	Standby
Oil Press. at Rated Speed--psi (kPa)	46(320)	46(320)
Min. Oil Pressure--psi (kPa)	15 (105)	
Max. Oil Carryover in Blow-by--lb/hr (g/hr)	0.002 (1.0)	
Max. Airflow in Blow-by--gal/min (l/min)	26 (100)	
Max. Crankcase Pressure--in. H_2O (kPa)	2 (0.5)	

Performance Data	Prime	Standby
Rated Power--hp (kW)	121 (90)	133 (99)
Rated Speed--rpm	1800	1800
Low Idle Speed--rpm	1150	1150
Rated Torque--lb-ft (N•m)	772 (569)	849 (626)
BMEP--psi (kPa)	230 (1589)	254 (1748)
Friction Power @ Rated Speed--hp (kW)	17 (13)	17 (13)
Altitude Capability--ft (m)	10,000(3050)	10,000(3050)
Ratio--Air : Fuel	22 : 1	21 : 1
Smoke @ Rated Speed--Bosch No.	0.94	1.3
Noise--dB(A) @ 1 m	86.5*	86.5*

Fuel Consumption -- lb/hr (kg/h)	Prime	Standby
25 % Power	14.2 (6.5)	15.6 (7.1)
50 % Power	26.5 (12.0)	29.0 (13.1)
75 % Power	36.2 (16.2)	39.7 (18.0)
100 % Power	44.7 (20.3)	49.0 (22.3)

All values at rated speed and power with standard options unless otherwise noted.

* Revised Data
Curve 4045HF2851800133..... Sheet 2 of 2
June 2007

KOHLER. POWER SYSTEMS

TIB-102

TECHNICAL INFORMATION BULLETIN

Alternator Data Sheet

Alternator Model: 4R9X
Frequency: 60 Hz
Speed: 1800 RPM
Leads: 12 (6 Lead, 600 Volt)

Voltage L-N/L-L	Phase	Power Factor	Connection	kW* (kVA) Class B 80°C Continuous	Class F 90°C Lloyds	Class F 95°C ABS	Class F 105°C Continuous	Class F 130°C Standby	Class H 125°C Continuous	Class H 150°C Standby
139/240 277/480	3	0.8	Wye	84.0 (105.0)	88.5 (110.5)	90.5 (113.0)	95.0 (118.5)	103.0 (128.5)	101.5 (126.5)	109.5 (136.5)
127/220 254/440	3	0.8	Wye	83.0 (103.5)	87.5 (109.0)	89.5 (111.5)	93.5 (116.5)	101.5 (126.5)	100.0 (125.0)	108.0 (135.0)
120/208 240/416	3	0.8	Wye	82.0 (102.5)	86.0 (107.5)	88.0 (110.0)	92.0 (115.0)	100.5 (125.5)	98.5 (123.0)	106.5 (133.0)
110/190 220/380	3	0.8	Wye	74.5 (93.0)	78.0 (97.5)	80.0 (100.0)	84.5 (105.5)	91.5 (114.0)	89.5 (111.5)	96.5 (120.5)
120/240	3	0.8	Delta	82.0 (102.5)	86.0 (107.5)	88.0 (110.0)	92.0 (115.0)	100.5 (125.5)	98.5 (123.0)	106.5 (133.0)
120/240	1	1.0	Dogleg	64.5 (64.5)	67.5 (67.5)	68.5 (68.5)	71.0 (71.0)	77.5 (77.5)	76.5 (76.5)	82.5 (82.5)
347/600	3	0.8	Wye	83.5 (104.0)	88.0 (110.0)	90.0 (112.5)	94.5 (118.0)	102.5 (128.0)	101.0 (126.0)	109.0 (136.0)

* All data tested in accordance with IEEE Standard 115. Kohler Co. reserves the right to change the design or specifications without notice and without any obligation or liability whatsoever.

Submittal Data: 139/240 Volts, 0.8 PF, 1800 RPM, 60 Hz, 3 Phase, 130°C Rise

	Symbol	PerUnit	Ohms
Typical Cold Resistances			
Phase Resistance		0.036	0.016
Rotor Resistance		16.96	7.585
Typical Reactances			
Synchronous			
Direct	X_d	2.969	1.328
Quadrature	X_q	1.523	0.681
Transient			
Unsaturated	X'_{du}	0.292	0.131
Saturated	X'_d	0.257	0.115
Subtransient			
Direct	X''_d	0.123	0.055
Quadrature	X''_q	0.114	0.051
Negative Sequence	X_2	0.118	0.053
Zero Sequence	X_0	0.011	0.005

	Symbol	Value
Typical Time Constants		
Armature Short Circuit	T_a	0.007 sec.
Transient Short Circuit	T'_d	0.065 sec.
Transient Open Circuit	T'_{do}	0.748 sec.
Typical Field Current		
Full Load	If_{FL}	21.6 amps
No Load	If_{NL}	5.6 amps
Typical Short Circuit Ratio		0.337
Harmonic Distortion		
RMS Total Harmonic Distortion		3.20%
Max. Single Harmonic		5th
Deviation Factor (No Load, L-L)		<5%
Telephone Influence Factor		<50
Insulation Class		
per NEMA MG1-1.66		H
Phase Rotation		ABC

4R9X, 60 Hz, 139/240, 277/480 Volts, Wye
TYPICAL ALTERNATOR EFFICIENCY*

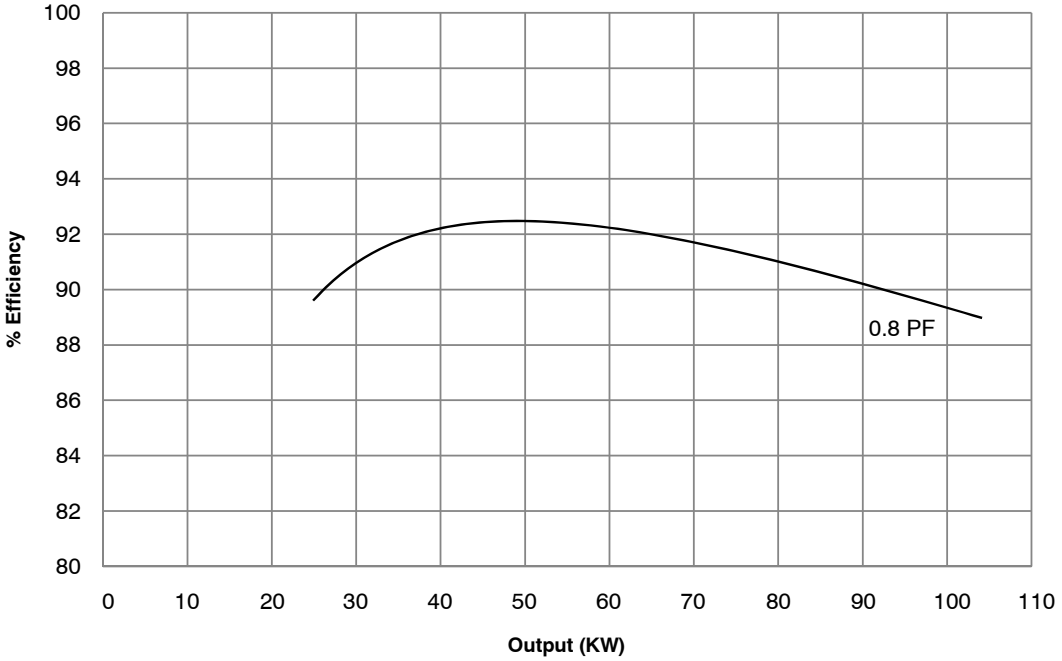

4R9X, 60 Hz, 139/240, 277/480 Volts, Wye
TYPICAL MOTOR STARTING CHARACTERISTICS*

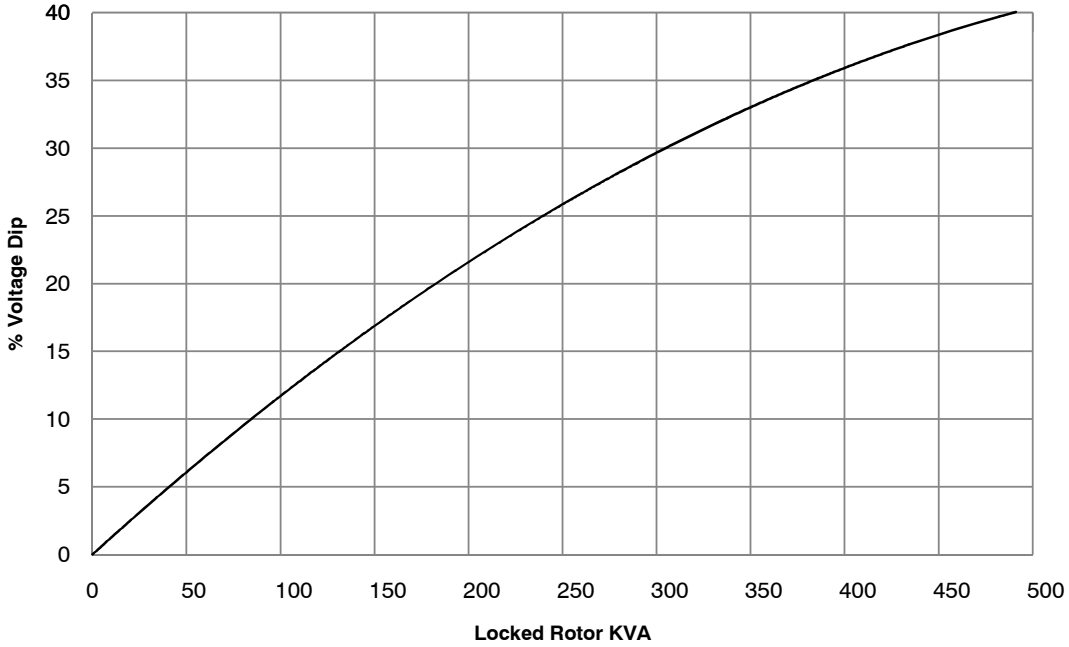

* All data tested in accordance with IEEE Standard 115. Kohler Co. reserves the right to change the design or specifications without notice and without any obligation or liability whatsoever.

4R9X, 60 Hz, Low Wye or Delta Connection
SHORT CIRCUIT DECREMENT CURVE

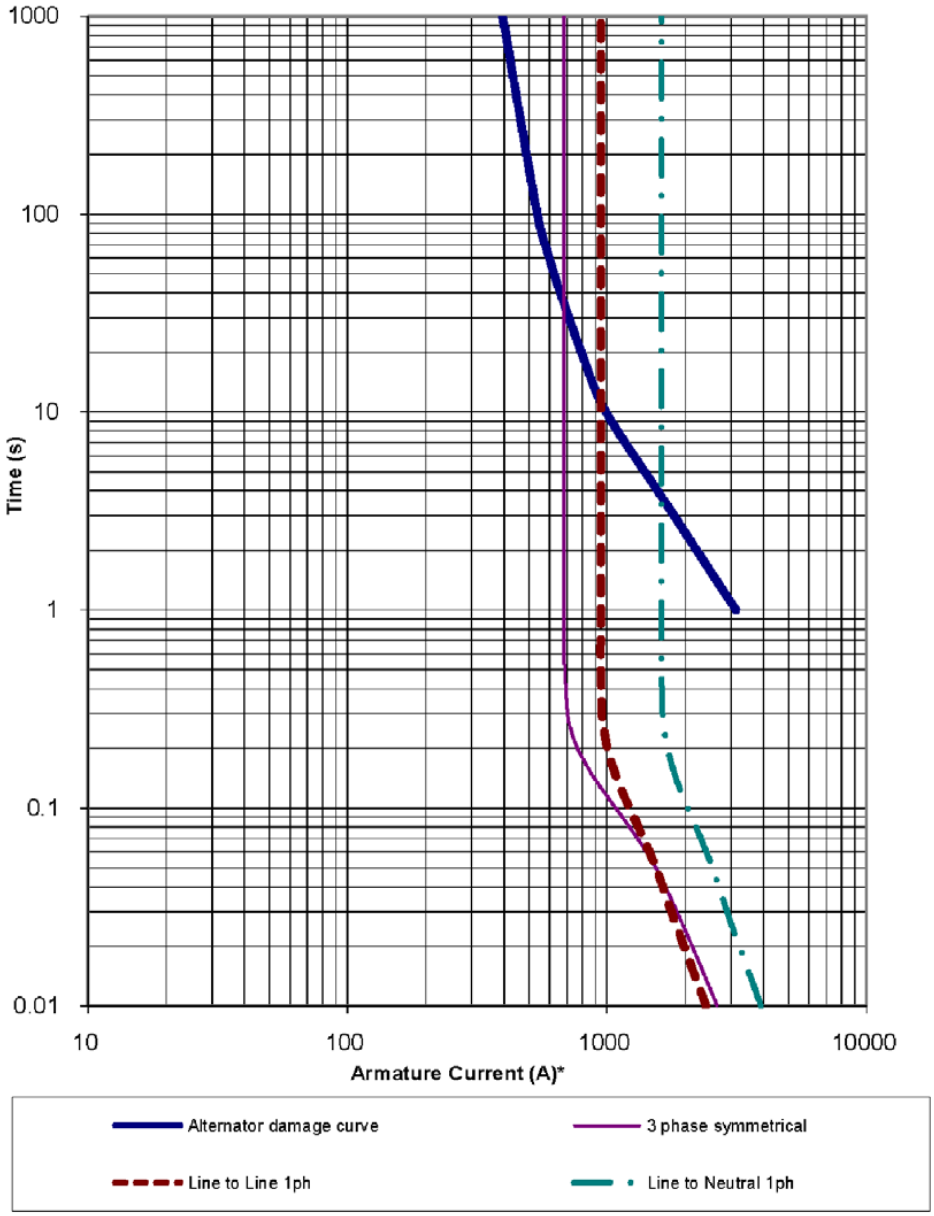

*Instantaneous current (t=0) is asymmetric. Divide by 1.73 for symmetric.

4R9X, 60 Hz, High Wye Connection
SHORT CIRCUIT DECREMENT CURVE

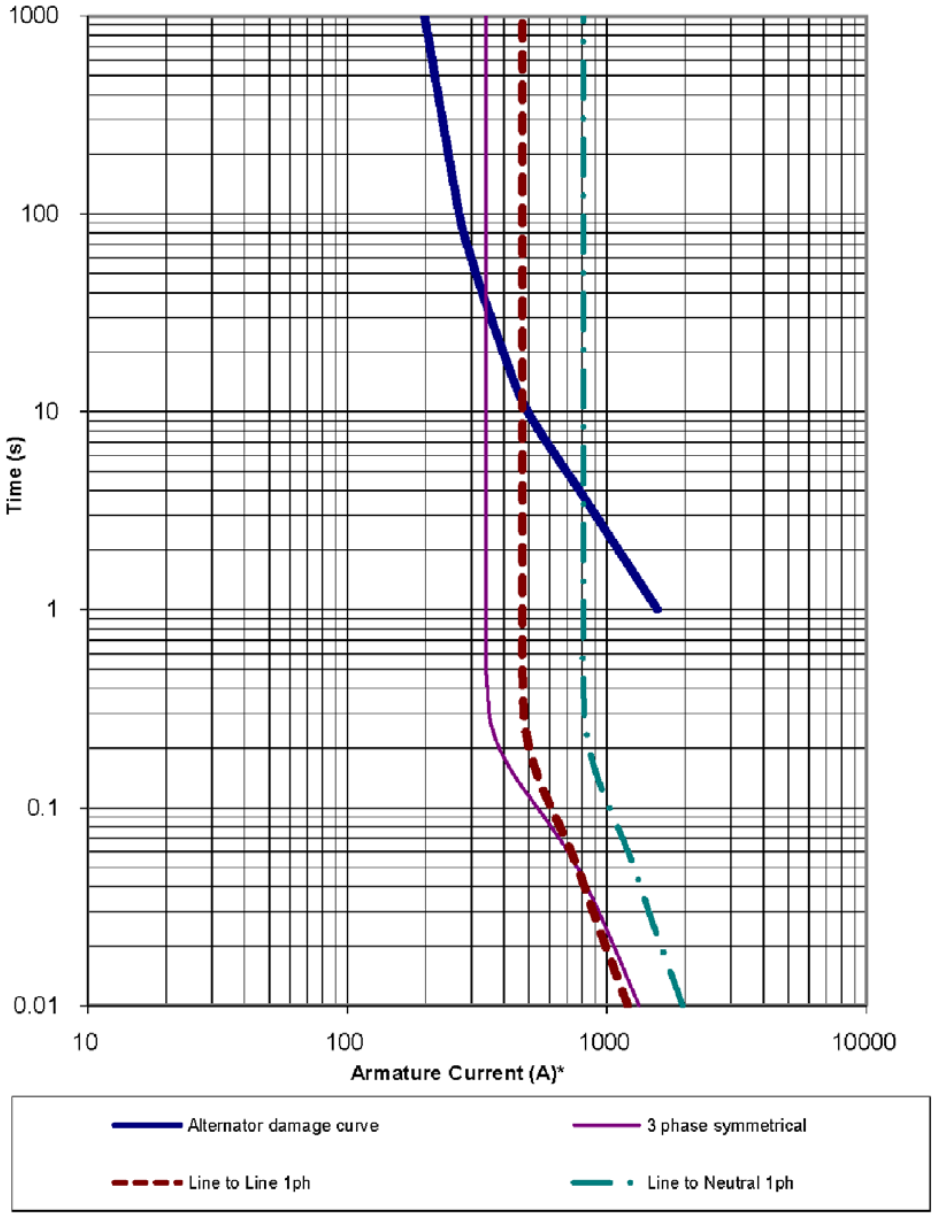

*Instantaneous current (t=0) is asymmetric. Divide by 1.73 for symmetric.

KOHLER Power Systems

TIB-114

TECHNICAL INFORMATION BULLETIN

Generator Set Sound Data Sheet

			Sound Pressure Data in dB(A)				
Generator Set Model	**Hz**	**Load**	**Raw Exhaust**	**Open Unit, Isolated Exhaust**	**Weather Enclosure**	**Sound Enclosure**	**Snow Sound Enclosure**
80REOZJF	60	100% Load	112.4	84.9	83.0	69.3	69.0
		No Load	100.1	80.9	79.0	68.3	66.1

Note: Sound pressure data is the logarithmic average of eight perimeter measurement points at a distance of 7 m (23 ft.), except Raw Exhaust data which is a single measurement point at 1 m (3.3 ft.) from the mouth of a straight pipe exhaust.

Continued on next page

80REOZJF	60 Hz

Load	Distance, m (ft)	Enclosure	Measurement Clock Position	Sound Pressure Levels, dB(A)								
				Octave Band Center Frequency (Hz)								Overall Level
				63	125	250	500	1000	2000	4000	8000	
100% Load	7 (23)	Snow Sound	3:00	54.0	61.1	57.1	61.7	55.8	54.7	52.7	43.3	66.4
			1:30	54.7	63.5	60.4	60.3	59.4	57.9	57.6	49.3	68.4
			12:00-Engine	53.3	61.3	62.5	65.0	63.5	62.3	62.2	53.8	70.9
			10:30	54.3	61.1	63.4	67.8	58.5	58.7	55.6	48.0	70.7
			9:00	60.2	64.2	60.6	64.3	61.4	59.6	58.0	49.3	70.2
			7:30	54.7	58.6	58.3	62.8	57.4	56.6	59.9	51.3	67.6
			6:00-Alternator	52.6	58.6	57.0	58.0	57.1	60.7	64.7	58.9	68.7
			4:30	47.8	58.3	55.5	62.2	59.2	57.8	58.8	50.8	67.0
			8-pos. log avg.	55.1	61.4	60.1	63.7	59.7	59.1	60.1	52.8	69.0

Load	Distance, m (ft)	Enclosure	Measurement Clock Position	Sound Pressure Levels, dB(A)								
				Octave Band Center Frequency (Hz)								Overall Level
				63	125	250	500	1000	2000	4000	8000	
100% Load	7 (23)	Sound	3:00	40.7	60.9	61.7	63.1	59.5	58.2	55.3	50.7	68.3
			1:30	46.0	58.5	62.6	66.1	63.2	59.8	59.6	52.6	70.3
			12:00-Engine	48.2	58.6	61.4	66.3	62.2	62.1	61.5	55.6	70.6
			10:30	49.7	59.9	62.9	66.1	62.4	60.6	59.7	54.4	70.5
			9:00	45.4	59.1	62.8	63.6	59.1	59.4	58.4	54.3	68.9
			7:30	42.3	58.7	63.4	62.3	59.7	58.9	57.4	52.8	68.6
			6:00-Alternator	48.2	56.6	59.6	63.9	59.4	58.6	56.8	51.5	67.8
			4:30	48.0	56.4	61.1	62.5	61.2	58.8	56.9	51.1	68.0
			8-pos. log avg.	46.9	58.8	62.1	64.5	61.1	59.7	58.6	53.2	69.3

Load	Distance, m (ft)	Enclosure	Measurement Clock Position	Sound Pressure Levels, dB(A)								
				3:00	1:30	12:00 Eng.	10:30	9:00	7:30	6:00 Alt.	4:30	8-pos. log avg.
100% Load	7 (23)	Weather	Overall Levels	81.2	84.3	78.9	82.6	83.0	83.1	85.3	82.8	83.0

Load	Distance, m (ft)		Measurement Clock Position	Sound Pressure Levels, dB(A)								
				Octave Band Center Frequency (Hz)								Overall Level
				63	125	250	500	1000	2000	4000	8000	
100% Load	7 (23)	Open Unit, Isolated Exhaust	3:00	56.9	62.2	73.4	74.5	74.8	78.4	73.9	68.6	83.1
			1:30	58.0	65.0	72.9	73.0	76.1	79.7	77.4	72.2	86.2
			12:00-Engine	64.7	61.3	72.5	73.9	73.7	75.3	70.4	64.5	80.8
			10:30	64.4	61.1	72.6	75.9	77.4	79.4	75.8	70.2	84.5
			9:00	67.8	64.7	74.0	78.7	78.2	79.0	75.0	71.5	84.9
			7:30	66.9	62.4	74.0	76.9	75.6	76.8	77.0	72.3	85.0
			6:00-Alternator	63.4	62.3	73.3	75.2	74.0	77.1	78.4	75.6	87.2
			4:30	57.7	61.9	72.6	76.2	75.9	80.2	75.8	70.7	84.7
			8-pos. log avg.	64.1	62.8	73.2	75.9	76.0	78.5	76.0	71.6	84.9

Load	Distance, m (ft)	Exhaust	Sound Pressure Levels, dB(A)								
			Octave Band Center Frequency (Hz)								Overall Level
			63	125	250	500	1000	2000	4000	8000	
100% Load	1 (3.3)	Raw Exhaust (No Silencer)	75.2	94.8	98.6	101.4	104.0	103.7	107.8	105.9	112.4

KOHLER®

80REOZJF

60 HZ. DIESEL INDUSTRIAL GENERATOR SET EMISSION DATA SHEET

ENGINE INFORMATION

Model:	John Deere, 4045HF285H	Bore:	106mm (4.19 in.)
Nameplate BHP @ 1800 RPM:	133	Stroke:	127mm (5.0 in.)
Type:	4-Cycle, 4 Cylinder, Inline	Displacement:	4.5 L (276 cu. in.)
Aspiration:	Turbocharged, Charge Air-Cooled		
Compression Ratio	19.0:1	EPA Family:	MJDXL04.5119
		EPA Certificate:	MJDXL04.5119-003

PERFORMANCE DATA:

	Table 1			
	1/4 Standby	1/2 Standby	3/4 Standby	Full Standby
Engine bkW @ Stated Load	25	50	74	99
Fuel Consumption (g/kWh)	286	265	242	225
Exhaust Gas Flow (m^3/min)				19
Exhaust Temperature (°C)				579

EXHAUST EMISSION DATA:

	Table 2 EPA D2 Cycle 5-mode weighted
HC (Total Unburned Hydrocarbons)	0.15
NOx (Oxides of Nitrogen as NO2)	3.36
CO (Carbon Monoxide)	1.3
PM (Particulate Matter)	0.17

Values are in g/kWh unless otherwise noted

TEST METHODS AND CONDITIONS

The emission data listed is measured from a laboratory test engine according to the test procedures of 40 CFR 89 or 40 CFR 1039, as applicable. The test engine is intended to represent nominal production hardware, and there is no guarantee that every production engine will have identical test results. The family parent data represents multiple ratings and this data may have been collected at a different engine speed and load. Emission results may vary due to engine manufacturing tolerances, engine operating conditions, fuels used, alternate test methods, or other conditions.

Data and specifications subject to change without notice.

KOHLER. Power Systems

THIS PAGE INTENTIONALLY BLANK

SECTION FOUR

CERTIFICATIONS

THIS PAGE INTENTIONALLY BLANK

UL Product iQ™

FTSR.AU2019 - Engine Generators

Engine Generators

Kohler Co
Kohler Power Systems Div
N7650 Hwy LS
Sheboygan, WI 53083 United States

AU2019

Model(s): KD1250-4, KD2500-4, KD3250-4

Field installed accessories, automatic paralleling module & circuit breaker kits, Model(s): GM85144-KP1-QS, GM86368-KP1-QS, GM86369-KP1-QS

Stationary engine generator assemblies, Model(s): 1000REOZDB, 1000REOZDC, 1000REOZDD/REOZDE, 1000REOZM, 1000REOZMB, 1000REOZMD, 1000REZK, 1000ROZMC, 100REOZJ4, 100REOZJF, 100RZGD/REZGD/ERESD/ERESE, 10REOZDC, 10RES/RESA, 10RESV/RESVL, 12 RES, 1250REOZDC, 1250REOZM, 1250REOZMB, 1250REOZMD, 1250ROZMC, 125REOZJ4, 125REOZJG, 12RESM1, 12RESV/RESVL, 1350REOZDB, 14RES/RESA/RESB/RCA, 1500REOZDB, 1500REOZDC, 150REOZJ4, 150REOZJF, 15REOZK, 1600REOZM, 1600REOZMB, 1600REOZMD, 1600ROZMC, 1750REOZDC, 1750REOZMB, 1750REOZMD, 17RES, 180REOZJF, 180REOZJG, 180REZXB/RZXB, 1820REOZDB, 1820REOZM, 1820ROZMC, 18RES, 2000REOZDB, 2000REOZDC, 2000REOZM, 2000REOZMB, 2000REOZMD, 2000ROZMC, 200REOZJF, 200REZXB/RZXB, 20REOZK, 20REOZK-C, 20RES/RESA/RESB/RESC/RESD/RCA, 2250DSEC, 2250REOZDC, 230REOZJE, 24RCL, 2500REOZD, 2500REOZDB, 250REOZJC, 250REOZJE, 250REZXB/RZXB, 25CCL, 25REZG, 275REOZJE, 2800REOZD, 2800REOZDB, 300REOZJ, 300REZXB/REZXD/RZXB/RZXD, 300REZXC, 30CCL, 30RCL/RCLH, 30REOZK, 30REOZK4, 30REZG, 3250REOZD, 350REOZD, 350REOZDC, 350REOZDD, 350REOZJ/REOZJC, 350REOZJB/REOZJD, 350REOZVC, 350REZXB/REZXD/RZXB/RZXD, 350REZXB/RZXB, 36CCL, 38RCL/RCLA/RCLB, 400REOZD, 400REOZDD, 400REOZJ/REOZJC, 400REOZJB/REOZJD, 400REZXB/REZXD/RZXB/RZXD, 40CCL, 40REOZJC, 40REOZJE, 40REOZK, 40REOZK4, 40REZG, 450REOZD, 450REOZDB, 450REOZDD, 450REOZVB, 450REZXB/REZXD, 45REZG, 48RCL/RCLA/RCLB, 48REOZK4, 500REOZJ/REOZJC, 500REOZJB, 500REOZVB, 500REOZVC, 500REZK, 50REOZJD, 50REOZJE, 50REOZK, 50REZGB, 550REOZVB, 600REOZM, 600REOZMB, 600REOZVB, 600ROZM, 60RCL/RCLA, 60REOZJD, 60REOZK, 60REZGB, 650REOZDB, 650REOZDC, 6VSG, 700REOZDD/REOZDE, 750REOZDB, 750REOZDC, 750REOZM, 750REOZMB, 750REOZMD, 750REZK, 750ROZMC, 8.5 RES, 800REOZDB, 800REOZDD/REOZDE, 800REOZM, 800REOZMB, 800REOZMD, 800ROZMC, 80REOZJ4, 80REOZJF, 80RZGD/REZGD/ERESD, 8RESV/RESVL, 900REOZDB, 900REOZDC, 900REOZDD/REOZDE, 900REOZM, 900REOZMB, 900REOZMD, 900ROZMC, KD1000(F), KD1250-A(F), KD1350(F), KD1500(F), KD1600(F), KD1750(F), KD2000(F), KD2250(F), KD2500(F), KD2800(F), KD3000(F), KD3250(F), KD800(F), KD900(F), KG100/100R, KG125/125R, KG40, KG45, KG50, KG60, KG80/80R

Stationary Engine Generator Assemblies for Indoor & Outdoor Use, Model(s): KG150/R, KG180, KG200

---

bsi.

Certificate of Registration

QUALITY MANAGEMENT SYSTEM - ISO 9001:2015

This is to certify that:

Kohler Power Systems
N7650 Lakeshore Road
Sheboygan
Wisconsin
53083
USA

Holds Certificate No: **FM 727336**

and operates a Quality Management System which complies with the requirements of ISO 9001:2015 for the following scope:

Design, manufacture, and distributor support for electrical generators, alternators, fuel tanks, automatic transfer switches and switchgear.

This certificate is traceable to this company's original registration certificate number 16852 dated February 28, 1995 and issued by NQA.

For and on behalf of BSI:

Carlos Pitanga, Chief Operating Officer Assurance – Americas

Original Registration Date: 1995-02-28
Latest Revision Date: 2020-05-07

Effective Date: 2020-05-07
Expiry Date: 2021-11-06

Page: 1 of 2

...making excellence a habit.™

Certificate No: **FM 727336**

Location	Registered Activities
Kohler Power Systems N7650 Lakeshore Road Sheboygan Wisconsin 53083 USA	Design, manufacture, and distributor support for electrical generators, automatic transfer switches and switchgear.
Kohler Power Systems 300 N Dekora Woods Blvd Saukville Wisconsin 53080 USA	Manufacture of fuel tanks, skids, fabricated components and generators.
Kohler Power Systems Muth Warehouse 2821 Muth Court Sheboygan Wisconsin 53083 USA	The distribution of generator sets.
Kohler Power Systems KWIP Warehouse 4327 County EE Sheboygan Wisconsin 53081 USA	Receiving, sequencing and warehousing of generator components.

Original Registration Date: 1995-02-28

Latest Revision Date: 2020-05-07

Effective Date: 2020-05-07

Expiry Date: 2021-11-06

Page: 2 of 2

PROTOTYPE TEST REPORT

KOHLER.

Models Covered: **80REOZJF**
Model Tested: **80REOZJD**
Cooling System Tested: **50C**

Alternator Tested: **4S9**
Engine Tested: **4045HF285**
Voltage Tested: **208V**

GENSET

Maximum power test to assure that the prime mover and alternator have sufficient capacity to operate within specifications.

Meets Rated Load

Steady-state load test to ensure voltage stability meets or exceeds ISO8528-5 requirements and to verify compliance with steady state speed control specifications.

± 0.25 % Frequency Band

± 0.50 % Voltage Deviation

Transient load tests per NEMA MG1-32.18, and ISO 8528 to verify specifications of transient voltage regulation, voltage dip, voltage overshoot, recovery voltage, and recovery time. Values shown for model tested above. Please contact factory for additional details.

Full Load Acceptance	Full Load Rejection
17.8 % Voltage Dip	**12.5** % Voltage Overshoot
2.00 Seconds of Recovery Time	**1.20** Seconds of Recovery Time
10.3 % Frequency Dip	**2.30** % Frequency Overshoot
2.40 Seconds of Recovery Time	**0.80** Seconds of Recovery Time

G3 ISO8528-5 Class (G1, G2, G3)

NFPA 110 one step testing to determine the amount of time required for the generator set to reach 90% voltage and frequency to allow the ATS to transfer.

Complies with NFPA 110 Type 10

Vibrational analysis to verify that generator vibrations are within acceptable limits per ISO 8528-9.

Complies

Torsional analysis data to verify torsional effects are not detrimental and that the generator set will provide dependable service as specified.

Complies

Generator set cooling and air flow tests to verify maximum operating ambient temperature. (Cooling system test results are available on TIB-118)

Acoustical noise intensity and sound attenuation effects tests (Acoustical noise results are available on TIB-114 &115)

Exhaust Back Pressure test completed to demonstrate within engine limitation (Exhaust back pressure test results are available on TIB-119)

PROTOTYPE TEST REPORT

KOHLER

Models Covered: **80REOZJF**
Model Tested: **80REOZJD**
Cooling System Tested: **50C**

Alternator Tested: **4S9**
Engine Tested: **4045HF285**
Voltage Tested: **208V**

ALTERNATOR

Alternator temperature rise test per NEMA MG1-32.6. Standby and prime ratings of the alternator are established during this test.

Alternator overload test per NEMA MG1-32.8. Motor starting tests per NEMA MG1-32.18.5 to evaluate capabilities of generator, exciter, and regulator system.

Three-phase symmetrical short-circuit test per NEMA MG1-32.13 to demonstrate short circuit performance, mechanical integrity, ability to sustain short-circuit current.

Harmonic analysis, voltage waveform deviation per NEMA MG1-32.10 to confirm that the generator set is producing clean voltage within acceptable limits.

(Alternator detailed test results are available on TIB-102)

Kohler Standby/Prime Generator Set Test Program

Testing is an integral part of quality assurance. In keeping with our uncompromising commitment to quality, safety, and reliability, every Kohler Standby/Prime power generator set undergoes an extensive series of prototype and production testing.

Prototype Testing

Prototype testing includes the potentially destructive tests necessary to verify design, proper function of protective devices and safety features, and reliability expectations. Kohler's prototype testing includes the following:

- Alternator temperature rise test per NEMA MG1-32.6. Standby and prime ratings of the alternator are established during this test.
- Maximum power test to assure that the prime mover and alternator have sufficient capacity to operate within specifications.
- Alternator overload test per NEMA MG1-32.8.
- Steady-state load test to ensure voltage regulation meets or exceeds ANSI C84.1, NEMA MG1-32.17 requirements and to verify compliance with steady-state speed control specifications.
- Transient test to verify speed controls meets or exceeds specifications.
- Transient load tests per NEMA MG1-32.18, and ISO 8528 to verify specifications of transient voltage regulation, voltage dip, voltage overshoot, recovery voltage, and recovery time.
- Motor starting tests per NEMA MG1-32.18.5 to evaluate capabilities of generator, exciter, and regulator system.
- Three-phase symmetrical short-circuit test per NEMA MG1-32.13 to demonstrate short circuit performance, mechanical integrity, ability to sustain short-circuit current.
- Harmonic analysis, voltage waveform deviation per NEMA MG1-32.10 to confirm that the generator set is producing clean voltage within acceptable limits.
- Generator set cooling and air flow tests to verify maximum operating ambient temperature.
- Reliability tests to demonstrate product durability, followed by root cause analysis of discovered failures and defects. Corrective action is taken to improve the design, workmanship, or components.
- Acoustical noise intensity and sound attenuation effects tests.

Production Testing

In production, Kohler Standby/Prime generator sets are built to the stringent standards established by the prototype program. Every Kohler generator set is fully tested prior to leaving the factory. Production testing includes the following:

- Stator and exciter winding high-potential test on all generators. Surge transient tests on stators for generators 180 kW or larger. Continuity and balance tests on all rotors.
- One-step, full-load pickup tests to verify that the performance of each generator set, regulator, and governor meets published specifications.
- Regulation and stability of voltage and frequency are tested and verified at no load, 1/4 load, 1/2 load, 3/4 load, and full-rated load.
- Voltage, amperage, frequency and power output ratings verified by full-load test.
- The proper operation of controller logic circuitry, prealarm warnings, and shutdown functions is tested and verified.
- Any defect or variation from specification discovered during testing is corrected and retested prior to approval for shipment to the customer.

Torsional analysis data, to verify torsional effects are not detrimental and that the generator set will provide dependable service as specified, is available upon request.

Kohler offers other testing at the customer's request at an additional charge. These optional tests include power factor testing, customized load testing for specific application, witness testing, and a broad range of MIL-STD-705c testing. A certified test report is also available at an additional charge.

KOHLER®

KOHLER CO. Kohler, Wisconsin 53044
Phone 920-565-3381, Fax 920-459-1646
For the nearest sales/service outlet in the US and Canada, phone 1-800-544-2444
KohlerPowerSystemscom

G18-56 12/05b

THIS PAGE INTENTIONALLY BLANK

VMC GROUP
THE POWER OF TOGETHER™

KOHLER®

CERTIFICATE OF COMPLIANCE

SEISMIC DESIGN OF NONSTRUCTURAL COMPONENTS AND SYSTEMS

IBC CERTIFIED VMC GROUP

Certification No.

VMA-45451-01C (Revision 6)

Expiration Date: 10/31/2022

Certification Parameters:

The nonstructural products (mechanical and/or electrical components) listed on this certificate are CERTIFIED[1] FOR SEISMIC APPLICATIONS in accordance with the following building code[2] releases.

IBC 2009, 2012, 2015, 2018

The following model designations, options, and accessories are included in this certification. Reference report number VMA-45451-01 as issued by The VMC Group for a complete list of certified models, included accessories/options, and certified installation methods.

Kohler; Diesel Gensets
REOZJx; 20kW - 500kW

The above referenced equipment is **APPROVED** for seismic application when properly installed[3], used as intended, and contains a Seismic Certification Label referencing this Certificate of Compliance[4]. As limited by the tabulated values, below grade, grade, and roof-level installations, installations in essential facilities, for life safety applications, and/or of equipment containing hazardous contents are permitted and included in this certification with an Equipment Importance Factor assigned as I_p=1.5. The equipment is qualified by successful seismic shake table testing at the nationally recognized University of California Berkeley Pacific Earthquake Engineering Research Center, Curtis-Wright Flow Control Company Qualtech NP (Formerly Trentec), and Clark Dynamic Test Laboratory under the witness of the ISO Accredited Product Certification Agency, The VMC Group.

Certified Seismic Design Levels			
Certified **IBC**	**Importance $I_p \leq 1.5$** Soil Classes A-E Risk Categories I-IV Design Categories A-F	$z/h \leq 1.0$	$z/h = 0.0$
		$S_{DS} \leq 1.930$ g	$S_{DS} \leq 1.930$ g

Certified Seismic Installation Methods	
Rigid Mounting From Unit Base To Rigid Structure	Rigid Mounting From Unit Base To Fuel Tank

HEADQUARTERS
113 Main Street
Bloomingdale, NJ 07403
Phone: 973.838.1780
Toll Free: 800.569.8423
Fax: 973.492.8430

CALIFORNIA
180 Promenade Circle
Suite 300
Sacramento, CA 95834
Phone: 916.634.7771

TEXAS
11930 Brittmoore Park Drive
Houston, TX 77041
Phone: 713.466.0003
Fax: 713.466.1355

thevmcgroup.com

ADVANCED ANTIVIBRATION COMPONENTS

DCL DYNAMIC CERTIFICATION LABORATORIES, LLC

VMC GROUP
THE POWER OF TOGETHER™

KOHLER®

CERTIFICATE OF COMPLIANCE

SEISMIC DESIGN OF NONSTRUCTURAL COMPONENTS AND SYSTEMS

Certified Product Table:

Model	Rating Range [kW]	EPA Rating	Configuration	Max L [in.]	Max W [in.]	Max H [in.]	Max Weight [lbs.]
REOZJC	20 - 60	Tier 3	Off Tank	91	42	60	2,566
			On Tank	114		96	4,228
REOZJD	50 - 60		Off Tank	91		60	2,556
			On Tank	114		96	4,228
REOZJE	80 - 275		Off Tank	162	53	85	6,250
			On Tank	210		121	10,330
REOZJF	80 - 200		Off Tank	161		84	5,090
			On Tank	197		120	8,530
REOZJG	125 - 180		Off Tank	161		84	4,250
			On Tank	197		120	7,960
REOZJ	300 - 500	Tier 2, 3	Off Tank	198	70	95	11,525
			On Tank	301	102	138	19,236
REOZJB	350 - 500		Off Tank	233	59	91	11,523
			On Tank	379	102	140	19,420

*Maximum weight and dimensions reflect greatest for open and enclosed. For exact limits please contact the manufacturer.

Group	Type	S_{DS} (z/h=0)	S_{DS} (z/h=1)	A_{Flex-H}	A_{Rig-H}	A_{Flex-V}	A_{Rig-V}	F_p/W_p
Seismic	AC156	1.93	1.93	3.09	2.32	1.29	0.52	1.39

This certification includes the open generator set and the enclosed generator set when installed with or without the sub-base tank. This certification also includes the sub-base tank as a stand-alone accessory. The generator set and included options shall be a catalogue design and factory supplied. The generator set and applicable options shall be installed and attached to the building structure per the manufacturer supplied seismic installation instructions. For a list of certified configurations and options please directly contact the manufacturer. This certification excludes all non-factory supplied accessories, including but not limited to mufflers, isolation/restraint devices, remote control panels, remote radiators, pumps and other electrical/mechanical components.

IBC CERTIFIED
VMC GROUP

VMA-45451-01C (Revision 6)
Issue Date: Tuesday, September 3, 2013
Revision Date: Monday, October 21, 2019
Expiration Date: Monday, October 31, 2022

102S-103387 Rev15

VMC GROUP
THE POWER OF TOGETHER™

KOHLER®

CERTIFICATE OF COMPLIANCE

SEISMIC DESIGN OF NONSTRUCTURAL COMPONENTS AND SYSTEMS

Notes & Comments:

1. All equipment listed herein successfully passed the seismic acceptance criteria for shake testing non-structural components and systems as set forth in the ICC AC-156. The Test Response Spectrum (TRS) enveloped the Required Response Spectrum (RRS) for all units tested. The units cited in this certification were representative sample(s) of a contingent of models and all remained captive and structurally sound after the seismic shake simulation. The units also remained functionally operational after the simulation testing as functional testing was completed by the equipment manufacturer before and after the seismic simulations. Although a seismic qualified unit inherently contains some wind resisting capacity, that capacity is undetermined and is excluded from this certification. Snow/Ice loads have been neglected and thus limit the unit to be installed both indoors (covered by an independent protective structure) and out of doors (exposed to accumulating snow/ice) for ground snow loads no greater than 30 psf for all applications.

2. The following building codes are addressed under this certification:
   IBC 2018 referencing ASCE7-16 and ICC-ES AC-156
   IBC 2015 referencing ASCE7-10 and ICC-ES AC-156
   IBC 2012 referencing ASCE7-10 and ICC-ES AC-156
   IBC 2009 referencing ASCE7-05 and ICC-ES AC-156

3. Refer to the manufacturer supplied installation drawings for anchor requirements and mounting considerations for seismic applications. Required anchor locations, size, style, and load capacities (tension and shear) may be specified on the installation drawings or specified by a 3rd party. Mounting requirement details such as anchor brand, type, embedment depth, edge spacing, anchor-to-anchor spacing, concrete strength, special inspection, wall design, and attachment to non-building structures must be outlined and approved by the Engineer of Record for the project or building. Structural walls, structural floors, and housekeeping pads must also be seismically designed and approved by the project or building Structural Engineer of Record to withstand the seismic anchor loads as defined on the installation drawings. The installing contractor is responsible for observing the installation detailed in the seismic installation drawings and the proper installation of all anchors and mounting hardware.

4. For this certificate and certification to remain valid, this certificate must correspond to the "Seismic Certification Label" found affixed to the unit by the factory. The label ensures the manufacturer built the unit in conformance to the IBC seismic design criteria set forth by the Certified Seismic Qualification Agency, The VMC Group, and meets the seismic design levels claimed by this certificate.

5. Mechanical, Electrical, and Plumbing connections to the equipment must be flexibly attached as to not transfer load through the connection. The structural integrity of any conduit, cable trays, piping, ductwork and/or flexible connections is the responsibility of others. This certification does not guarantee the equipment will remain compliant to NEMA, IP, UL, or CSA standards after a seismic event.

6. This certificate applies to units manufactured at:
   Kohler, N7650 Lakeshore Road, Sheboygan, WI 53083

7. This certification follows The VMC Group's ISO-17065 Scheme.

John P. Giuliano, PE
President, The VMC Group

IAS ACCREDITED Product Certification Agency

VMA-45451-01C (Revision 6)
Issue Date: Tuesday, September 3, 2013
Revision Date: Monday, October 21, 2019
Expiration Date: Monday, October 31, 2022

IBC CERTIFIED VMC GROUP

102S-103387 Rev15

G18-206 10/19b

KOHLER. Power Systems

THIS PAGE INTENTIONALLY BLANK

SECTION FIVE

LOAD BANK

THIS PAGE INTENTIONALLY BLANK

POLARIS

5KW - 150KW Load Bank

Description

The Simplex Polaris 2.0 is a highly standardized, advanced design, Load Bank Series, covering the small KW ranges, 5-150kw, at common 60 and 50 hertz low voltages. The Polaris is intended for permanent installation outdoors or indoors. The Polaris carries the UL and UL-C Listing. The product is designed for local or remote control, with standard digital HMI which accepts a sophisticated optional automation package.

The Polaris 2.0 is highly standardized into five frame sizes. Within a frame size, the unit can be easily programmed to a discrete KW rating based upon the standard load step resolution of the frame. Programming is easily accomplished via the standard touchpanel HMI.

The Polaris 2.0 is digitally controlled via an on-board PLC. Control is via a 4-inch TFT color touchpanel HMI. Remote control is via RS-485, shielded/twisted-pair network cable (1000m). Local and remote HMI is housed in a weather/tamper-resistant, lockable enclosure.

Basic unit is setup for manual control. Digital control is via direct numeric entry.

A comprehensive automation option is available which allows automatic load regulation via KW sensing such that the load bank automatically maintains a constant load on the generator. This function can be used for minimum loading to prevent wet-stacking and other low load issues, engine optimum loading for emissions control, and for regenerative power protection. Load levels, high/low set-point bandwidth, and time delays are easily user programmed on the touchpanel. With the automation option, full display of load bank electrical values (V-A-Hz-KW) is also provided.

Options are available for load bank integration with Building Automation Systems via MODBUS RTU RS-485 or MODBUS TCP.

Model	Version	Frame	KW Range	Step Resolution
Polaris	2.0	25	5-25	5
Polaris	2.0	50	30-50	5
Polaris	2.0	75	55-75	5
Polaris	2.0	100	80-100	10
Polaris	2.0	150	125-150	25

Voltage: 208v, 240v, 480v, 600v; 3-phase. 240v,single-phase. 50/60 hertz

Features

Construction: NEMA3R, outdoor weatherproof, pad-mountable, steel enclosure with removable access panels. Powder coated dark gray cabinet with high temperature black air hoods.

Load Elements: Simplex Powr-Web, UL recognized, chromium alloy, open wire, ceramic supported.

Load Control: Electromagnetic contactors.

Element Short Circuit Protection: Branch circuit fuses.

Cooling: Forced-air, shrouded aluminum fan blade direct driven by TEFC motor. Fan motor starter with external disconnect.

Power Wiring: 150°C XLP.

Power Connection: Power distribution block.

Control Power: Internal, from load bus, with isolation transformer (120v control). PLC powered via 24vDC conditioned power supply.

System Protection: Fan failure, high exhaust temperature, high intake temperature, lockout and alarm. Alarm message display on touchpanel.

Interior Heaters: Anti-condensation heaters with thermostatic control

Insight Onsite

SIMPLEX®

KOHLER. Power Systems

POLARIS

5KW - 150KW Load Bank • Page 2

SIMPLEX®

Controller

PLC based control with local or remote 4-inch TFT color HMI.

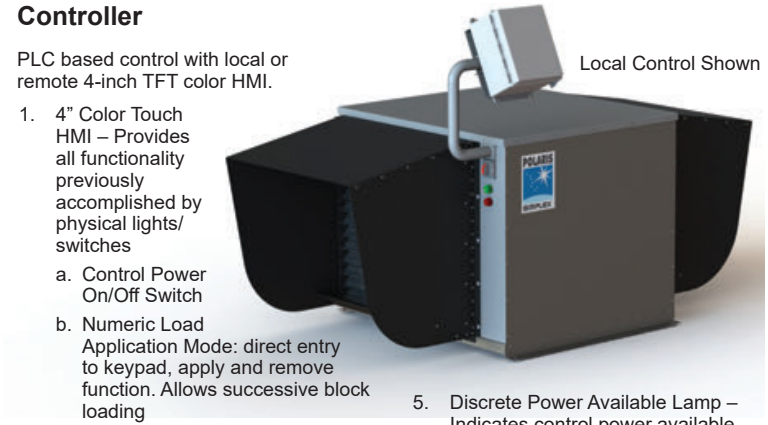

Local Control Shown

1. 4" Color Touch HMI – Provides all functionality previously accomplished by physical lights/ switches
   a. Control Power On/Off Switch
   b. Numeric Load Application Mode: direct entry to keypad, apply and remove function. Allows successive block loading
   c. Master Load Switch function
   d. Load Step Switches function
   e. Fan Failure Indication
   f. High Exhaust Temperature Indication
   g. Load Dump Active Indication
   h. Load Dump Bypassed Indication
   i. Setup Functions
   j. Various other functions depending on chosen options
2. Cooling Failure Load Lockout – Disables all load in the event of an exhaust over-temperature or fan failure
3. Remote Load Dump input – Allows user to connect normally closed contacts to permit remote load dump (close to run, open to dump)
4. Load Dump Bypass– Provides means to defeat load dump function above
5. Discrete Power Available Lamp – Indicates control power available to load bank. LED indicator on load bank.
6. Summary Alarm Lamp – Indicates that there has been a cooling failure, load dump activation or other failure. LED indicator on load bank.
7. BMS Monitoring (Dry Contacts) – Relay dry contacts for BMS monitoring of "normal operation", "summary alarm".
8. BMS Monitoring (Modbus RTU RS-485) – Allows all load bank conditions to be monitored via Modbus RTU RS-485
9. Cooling (to 25KW)
   a. 1/3HP TEFC Cooling Fan Motor, 4000 cfm
10. Cooling (50+KW)
    a. 3/4HP TEFC Cooling Fan Motor, 6000 cfm

Options

Option No.	Description
A	Automation option. Allows AUTOMATIC LOAD REGULATION, REGENERATIVE POWER PROTECTION, via KW sensing. Requires installation of remote current transformer (supplied). User programmable: set point, step up/step down bandwidth, initiate delay, step-up delay, step-down delay, shutdown delay. Includes voltage and frequency sensing with adjustable set point and delay. Includes display of volts-amps-hertz-kw and MODBUS registers for same.
020	BMS control. Allows load bank to be controlled/monitored by BMS
030	MODBUS TCP. Replaces MODBUS RTU-485 with TCP capability

SIMPLEX INC.
5300 Rising Moon Road, Springfield, IL 62711 • simplexdirect.com • 800-637-8603
Nationwide Manufacturing (ISO9001: 2015 certified)

KOHLER. Power Systems

Insight Onsite

POLARIS

5KW - 150KW Load Bank • Page 3

Model Number Generation

PS-2.0-100-2401-60-R-A

Example: PS-2.0-25-2083-60-R-M-020
20KW, 208V, 3-phase, 60Hz, Remote Manual Control with BMS Control

PS	2.0	25	2083	60	R	M	020
Polaris	**Version**	**Frame**	**Voltage**	**Frequency**	**Control**	**Function**	**Options**
Polaris	1.0 Legacy	25kw	2083	60Hz	L – Local	M – Manual	020: BMS Control
	2.0 2013	50kw	2403	50Hz	R – Remote	A – Automation	030: MODBUS TCP
		75kw	4803				
		100kw	6003				
		150kw	2401				
			(Volts x Hz)				

Polaris 25 Frame

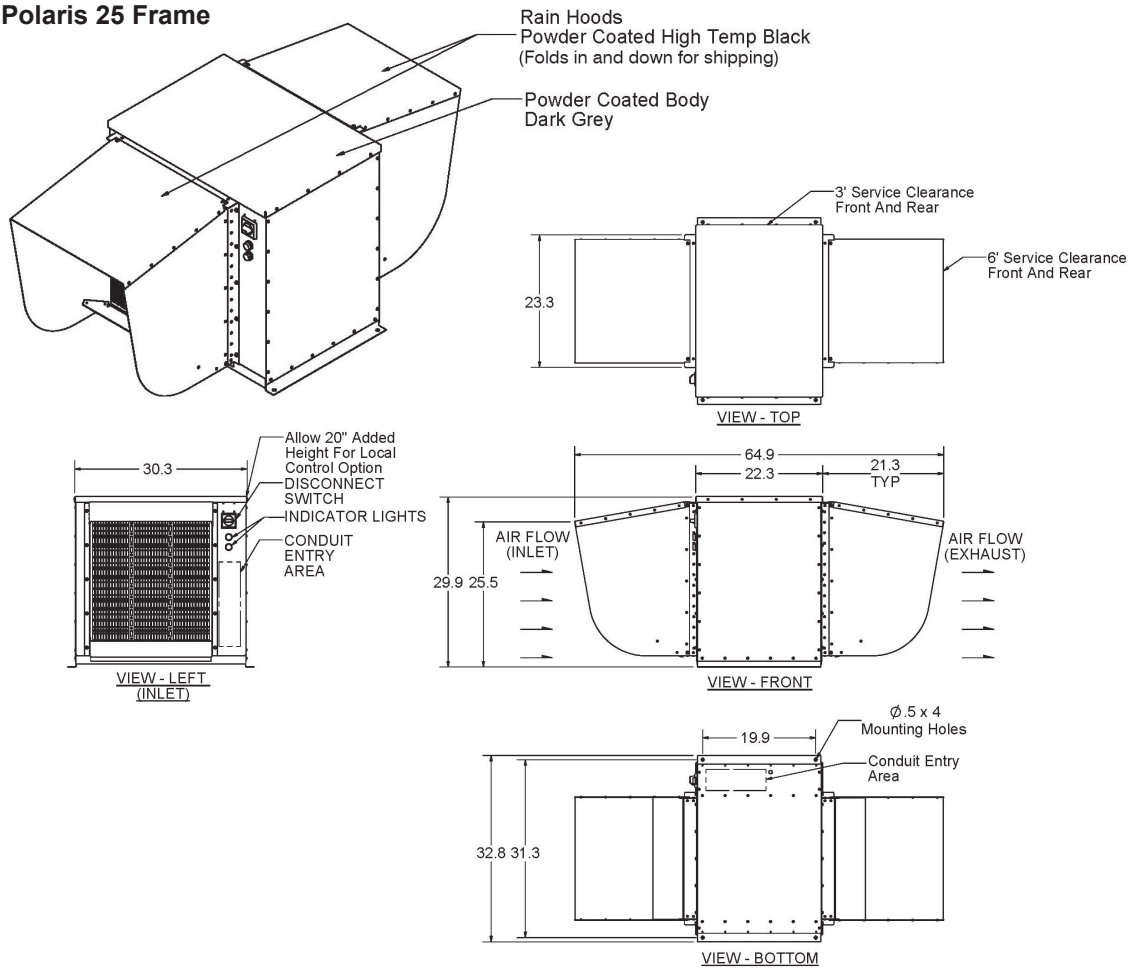

SIMPLEX INC.
5300 Rising Moon Road, Springfield, IL 62711 • simplexdirect.com • 800-637-8603
Nationwide Manufacturing (ISO9001: 2015 certified)

KOHLER. Power Systems

POLARIS

5KW - 150KW Load Bank • Page 4

SIMPLEX®

Polaris 50-75-100 Frame

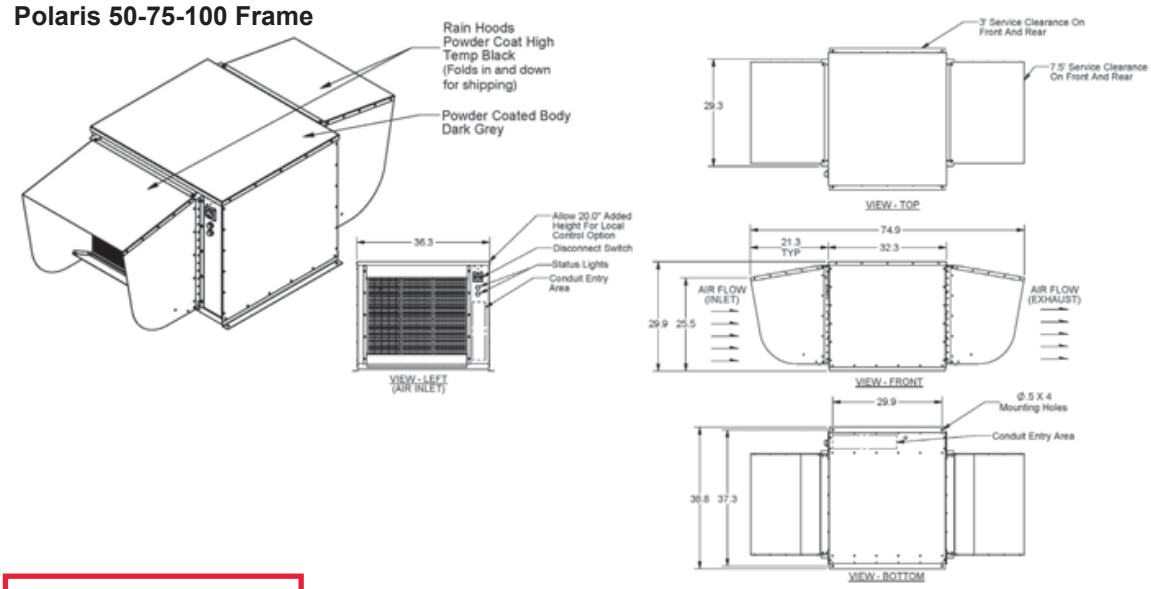

Polaris 100-150 Frame

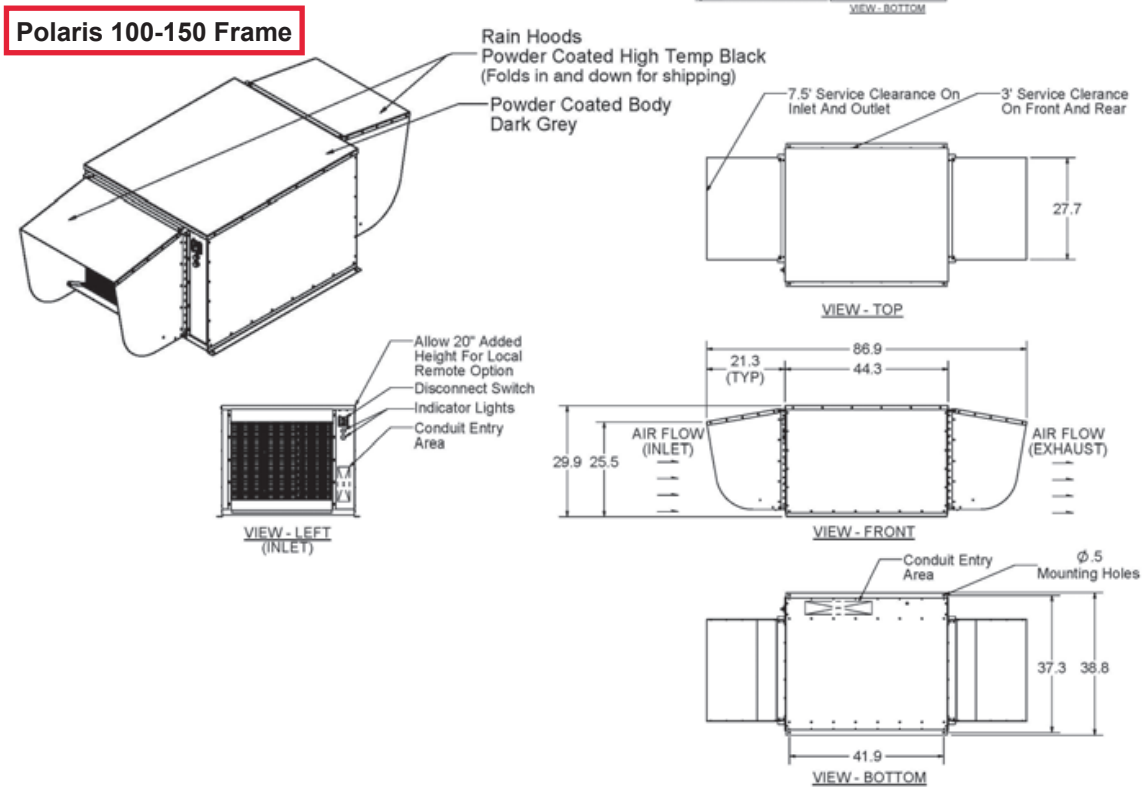

SIMPLEX INC.
5300 Rising Moon Road, Springfield, IL 62711 • simplexdirect.com • 800-637-8603
Nationwide Manufacturing (ISO9001: 2015 certified)

Printed in the USA • 1210-01.04

KOHLER. Power Systems

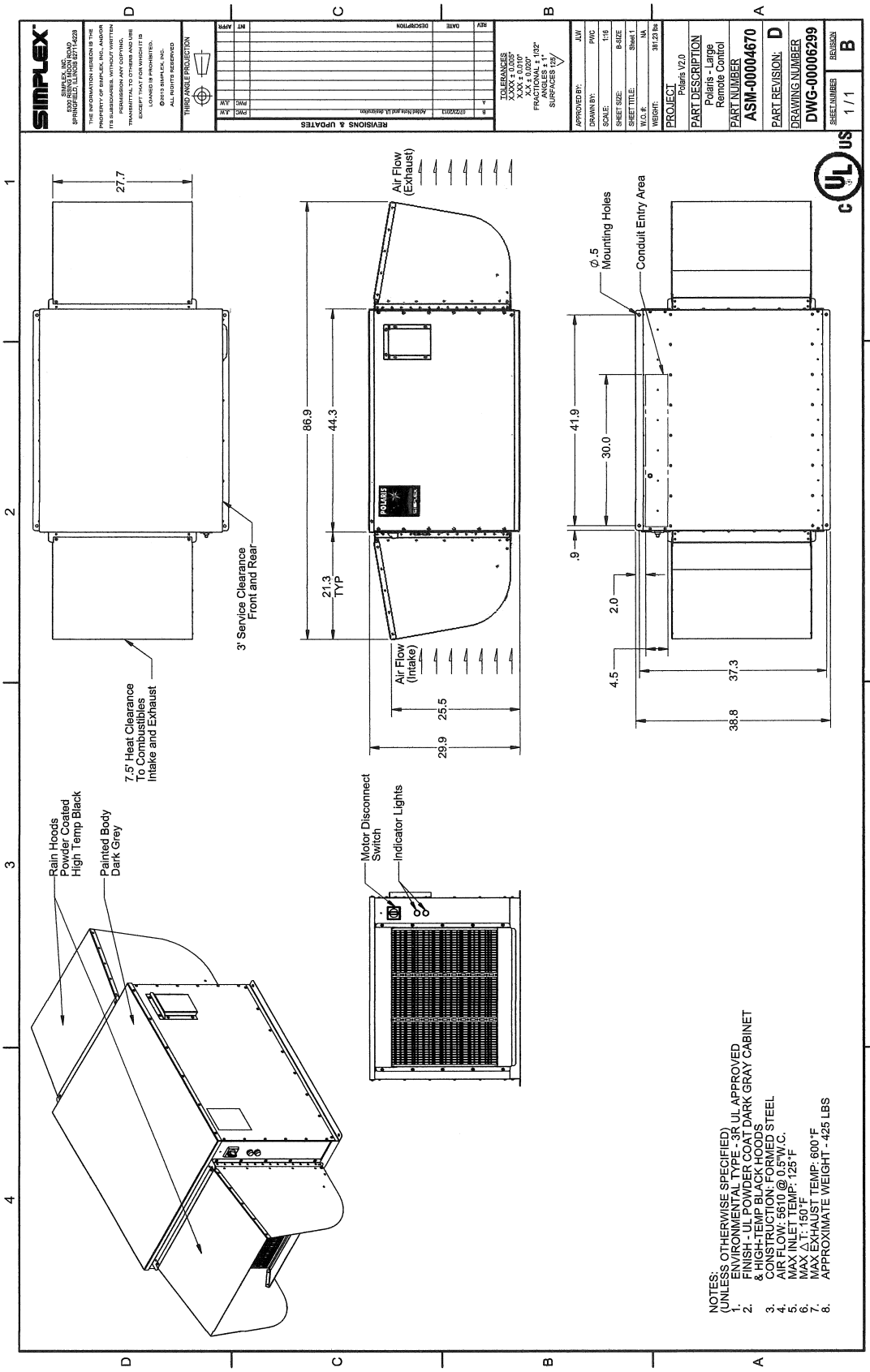
SIMPLEX
SIMPLEX, INC.
1000 RIDING HOOD ROAD
SPRINGFIELD, ILLINOIS 62228
THE INFORMATION HEREON IS THE PROPERTY OF SIMPLEX, INC., AND/OR THE LICENSOR(S) TO SIMPLEX, INC. PERMISSION FOR REPRODUCTION, TRANSMITTAL TO OTHERS AND USE EXCEPT THAT FOR WHICH IT IS LOANED IS PROHIBITED.
©2013 SIMPLEX, INC.
ALL RIGHTS RESERVED
THIRD ANGLE PROJECTION
REVISIONS & UPDATES
REV DATE DESCRIPTION
A 02/20/2013 Added Data and UL designation
TOLERANCES
XXXX ± 0.005"
XXX ± 0.010"
XX ± 0.020"
FRACTIONAL ± 1/32"
ANGLES ± 1°
SURFACES 125
APPROVED BY: JLM
DRAWN BY: PWC
SCALE: 1:16
SHEET SIZE: B-SIZE
SHEET TITLE: Sheet 1
W.O. #: NA
WEIGHT: 381.23 lbs
PROJECT
Polaris V2.0
PART DESCRIPTION
Polaris - Large
Remote Control
PART NUMBER
ASM-00004670
PART REVISION: D
DRAWING NUMBER
DWG-00006299
SHEET NUMBER 1 / 1
REVISION B
27.7
3' Service Clearance
Front and Rear
7.5' Heat Clearance
To Combustibles
Intake and Exhaust
Rain Hoods
Powder Coated
High Temp Black
Painted Body
Dark Grey
86.9
44.3
21.3
TYP
Air Flow
(Exhaust)
Air Flow
(Intake)
25.5
29.9
Motor Disconnect
Switch
Indicator Lights
Ø.5
Mounting Holes
Conduit Entry Area
41.9
30.0
.9
2.0
4.5
37.3
38.8
NOTES:
(UNLESS OTHERWISE SPECIFIED)
1. ENVIRONMENTAL TYPE - 3R UL APPROVED
2. FINISH - UL POWDER COAT DARK GRAY CABINET & HIGH-TEMP BLACK HOODS
3. CONSTRUCTION - FORMED STEEL
4. AIR FLOW: 5610 @ 0.5"W.C.
5. MAX INLET TEMP: 125°F
6. MAX ΔT: 150°F
7. MAX EXHAUST TEMP: 600°F
8. APPROXIMATE WEIGHT - 425 LBS

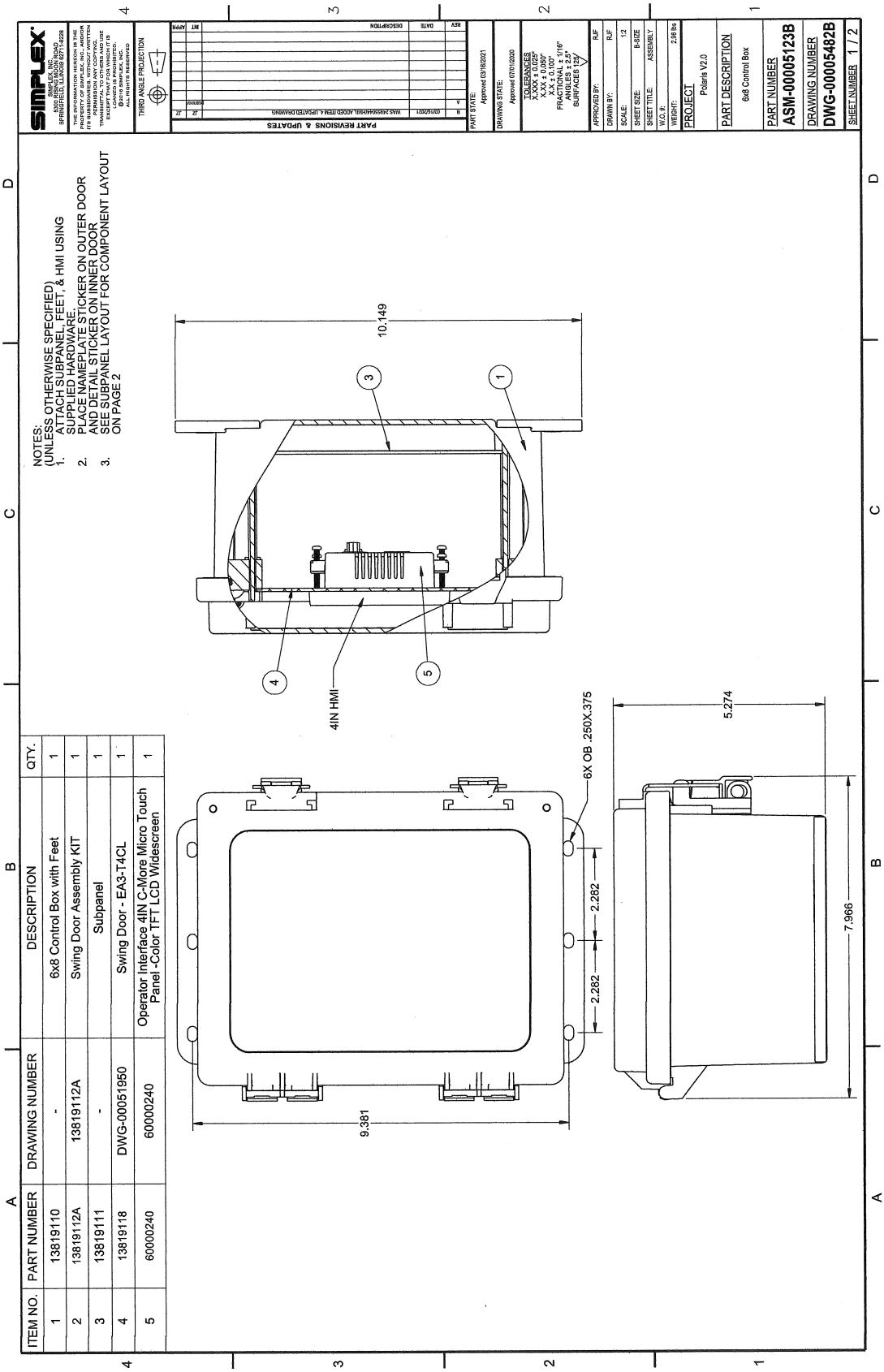

ITEM NO.	PART NUMBER	DRAWING NUMBER	DESCRIPTION	QTY.
1	13819110	-	6x8 Control Box with Feet	1
2	13819112A	13819112A	Swing Door Assembly KIT	1
3	13819111	-	Subpanel	1
4	13819118	DWG-00051950	Swing Door - EA3-T4CL	1
5	60000240	60000240	Operator Interface 4IN C-More Micro Touch Panel -Color TFT LCD Widescreen	1

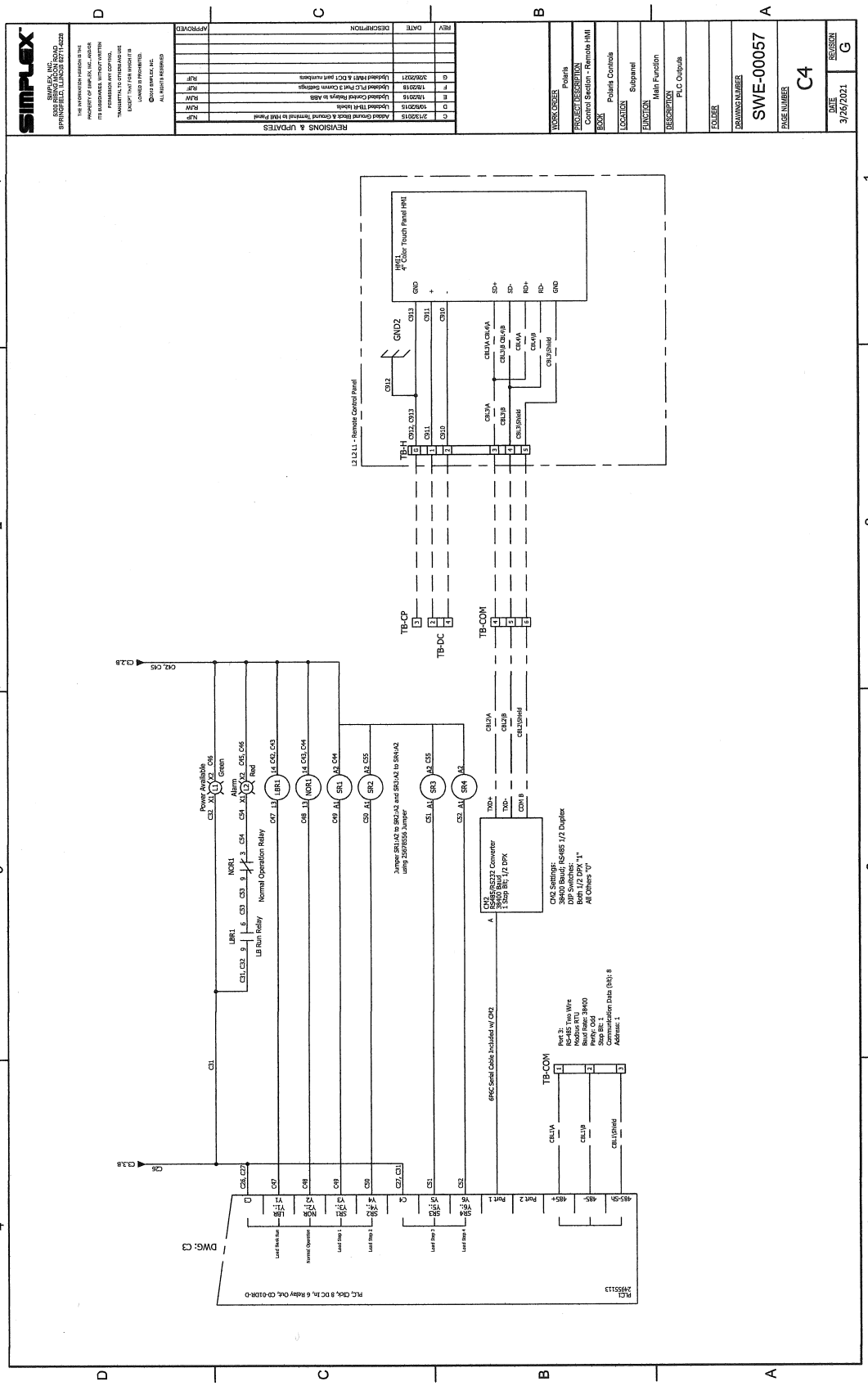
SIMPLEX
SIMPLEX, INC.
5300 BISHOP HILL ROAD
SPRINGFIELD, ILLINOIS 62711-6229
THE INFORMATION HEREON IS THE PROPERTY OF SIMPLEX, INC., AND/OR ITS SUBSIDIARIES, WITHOUT WRITTEN PERMISSION AND COPYING, TRANSMITTAL TO OTHERS AND USE EXCEPT THAT FOR WHICH IT IS LOANED IS PROHIBITED.
© 2012 SIMPLEX, INC.
ALL RIGHTS RESERVED
REVISIONS & UPDATES
REV DATE DESCRIPTION APPROVED
C 2/11/2015 Added Ground Block & Ground Terminal to HMI Panel NJP
D 10/8/2015 Updated TBH Labels RJW
E 1/8/2016 Updated Control Relays to ABB RJW
F 1/8/2018 Updated PLC Port 3 Comm Settings RJF
G 3/26/2021 Updated HMI#1 & DC1 part numbers RJF
WORK ORDER Polaris
PROJECT DESCRIPTION Control Section - Remote HMI
BOOK Polaris Controls
LOCATION Subpanel
FUNCTION Main Function
DESCRIPTION PLC Outputs
FOLDER
DRAWING NUMBER SWE-00057
PAGE NUMBER C4
DATE 3/26/2021
REVISION G
L2 (J1) - Remote Control Panel
HMI1 4" Color Touch Panel HMI
GND2
TB-H
TB-CP
TB-DC
TB-COM
Power Available
Alarm
LBR1
NOR1
SR1
SR2
SR3
SR4
LB Run Relay
Normal Operation Relay
Jumper SR1-A2 to SR2-A2 and SR3-A2 to SR4-A2 using 2507655G Jumper
CN2 RS232 Converter 39400 Baud 1 Stop Bit, 1/2 DPX
CN2 Settings: Simplex Port: RS-485 1/2 Duplex DIP Switches: Both 1/2 DPX "1" All Others "0"
6ft RC Serial Cable Included w/ CN2
Port 3: RS-485 Two Wire Modbus RTU Baud Rate: 38400 Parity: Odd Stop Bits: 1 Communication Data (bit): 8 Address: 1
PLC1 24955113
PLC, Dsk, 8 DC In, 6 Relay Out, CO-DDR-D
DWG: C3

THIS PAGE INTENTIONALLY BLANK

SECTION SIX

AUTOMATIC TRANSFER SWITCH

THIS PAGE INTENTIONALLY BLANK

5.2 Transfer Switches

Contactor-Based Transfer Switches

5

Contactor-Based Transfer Switch

Contents

Open Transition, 40–1600 A

Product Description

Eaton automatic transfer switches (ATS) provide unmatched performance, reliability and versatility for critical standby power applications. Automatic transfer switches can be equipped with the ATC-100, ATC-300+ and ATC-900 controllers to match any application need. Each controller offers rock-solid monitoring, status reporting and transfer control operation. Superior design and robust construction make Eaton's automatic transfer switch the industry benchmark for critical and distributed power systems.

Product Configuration

- 40, 80, 100, 150, 200, 225, 260, 400, 600, 800, 1000, 1200 and 1600 A ratings
- Two-, three- or four-pole
- Up to 600 Vac, 50/60 Hz
- NEMA® 1, 12, 3R, 4X, open

Design Highlights

- Double-throw, solenoid operated transfer mechanism
- Mechanically interlocked to prevent connection of both sources
- Field-selectable multi-tap transformer panel permits operation on a wide range of system voltages
- Methods of transfer include: open in-phase transition, time delay in neutral transition, or in-phase with a default to time delay in neutral transfer
- Silver composition main contacts
- Switch position indication contacts
- Source 1 position: 1 Form C
- Source 2 position: 1 Form C

Optional Accessories

- Eaton IQ and Power Xpert® series metering
- Automatic controller protective cover with padlock provision
- Surge protection device (UL 1449 3rd edition)
- Remote annunciator controller—monitor and control single or multiple automatic transfer switches
- Ethernet gateway with Web server (Modbus TCP/IP, SNMP, BACNet®)
- Space heater with thermostat

Features and Benefits

Standard and Optional Controller Features

Description	Automatic Controllers ATC-100	ATC-300+	ATC-900
Basic transfer control, plant exerciser, time delays, self diagnostics and system settings	Standard	Standard	Standard
Source mimic diagram with LED indication	Standard	Standard	Standard
Engine test and start contact	Standard	Standard	Standard
Dual source control power input	Standard	Standard	Standard
Liquid crystal display (LCD)	—	Standard	Standard
Programmable set points and plant exerciser	—	Standard	Standard
Password protection	—	Standard	Standard
Time stamped history and event log	—	Standard	Standard
Time delay bypass	—	Standard	Standard
Go to source 2 control input	—	Standard	Standard
Pre-transfer and general alarm control outputs	—	Standard	Standard
Lockout and monitor modes	—	Standard	Standard
Source status output relay contacts	—	Standard	Standard
Modbus RTU communication	—	Standard	Standard
Manual retransfer control input	—	Optional	Standard
Source 2 input / load shed input	—	Optional	Standard
USB port—profile and data management	—	—	Standard
Preferred source selection	—	—	Standard
Dual generator capability	—	—	Standard
User configurable inputs/outputs	—	—	Standard
Advanced diagnostics and troubleshooting with pre-/post-event data capture	—	—	Standard
Integrated load metering	—	—	Optional
Load management with selective load shed	—	—	Optional
DC voltage control power input	—	—	Optional
Three source ATS master/slave control	—	—	Optional
Modbus TCP/IP communication ①	—	Optional	Optional

Note

① Modbus TCP/IP option requires use of Modbus RTU port.

1600 ATS with ATC-300+ Controller

1200 A ATS with ATC-300+ Controller

5.2 Transfer Switches

Contactor-Based Transfer Switches

5

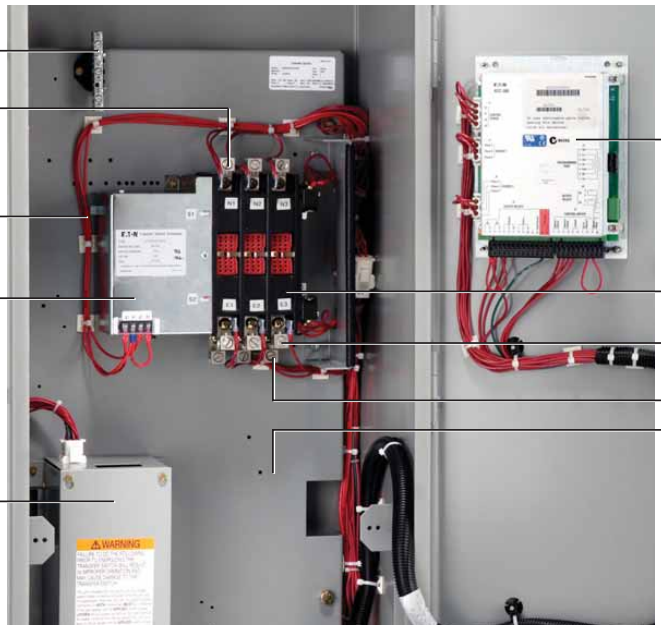

Typical Contactor-Based ATS 100–400 A

Standards and Certifications

- UL® 1008 Listed
- CSA® C22.2 No. 178 Certified
- Seismic Zone 4 qualified (CBC, IBC, UBC)
- OSHPD certification

Catalog Number Selection

Contactor-Based Transfer Switch (Open Transition)

AT-C-3-C5-X-2-0600-W-R-U

AT C 3 C2 X 3 0400 X S U

Type
- **AT** = Automatic
- **NT** = Non-automatic

Orientation
- **C** = Contactor

Logic
- **1** = ATC-100
- **3** = ATC-300+
- **9** = ATC-900
- **E** = Electromechanical

Mechanism
- **C2** = In-phase only
- **C3** = Time delay neutral (TDN) only
- **C5** = In-phase / TDN transfer

Mounting
- **X** = Fix mount

Number of Poles
- **2** = Two-pole
- **3** = Three-pole
- **4** = Four-pole

Amperes
- **0040** = 40 A
- **0080** = 80 A
- **0100** = 100 A
- **0150** = 150 A
- **0200** = 200 A
- **0225** = 225 A
- **0260** = 260 A
- **0400** = 400 A
- **0600** = 600 A
- **0800** = 800 A
- **1000** = 1000 A
- **1200** = 1200 A
- **1600** = 1600 A

Voltage
- **A** = 120 V, 60 Hz
- **B** = 208 V, 60 Hz
- **E** = 600 V, 60 Hz
- **G** = 220 V, 50 Hz
- **H** = 380 V, 50 Hz
- **O** = 415 V, 50 Hz
- **W** = 240 V, 60 Hz
- **X** = 480 V, 60 Hz

Enclosure
- **K** = Open
- **S** = NEMA 1
- **J** = NEMA 12
- **R** = NEMA 3R
- **D** = NEMA 4X

Certification
- **U** = UL listed

Note: The catalog numbering system offers a wide variety of standard configurations to meet your application needs. Please be advised that some catalog number combinations may not be available. Please contact your local Eaton sales representative with any configuration related questions.

5

Technical Data and Specifications

UL 1008 Transfer Switch (Contactor-Based) Short-Circuit Withstand and Closing Current Ratings

		Short-Circuit Withstand Closing Current Rating (kA)									
		When Protected by a Circuit Breaker		When Protected by a Specific Circuit Breaker		When Protected by a Specific Fuse					
		Time Duration (0.05 sec.① ② Max.)		Mfg. and Type Based		Mfg. and Type Based					
Transfer Switch Rating (A)	Switching Mechanism (Device Type)	480 Vac Max. (kA)	600 Vac Max. (kA)	480 Vac Max. (kA)	600 Vac Max. (kA)	480 Vac Max. (kA)	Fuse Class	Max. Fuse Size (A)	600 Vac Max. (kA)	Fuse Class	Max. Fuse Size (A)
40, 80, 100	C2	10	10	30	22	100	K5, RK5	200	100	K5, RK5	200
							K1, RK1	400		K1, RK1	400
							J, T	450		J, T	450
150, 200	C2	10	22	30	35	100	K5, RK5	400	200	RK1, RK5, J, C, K1, K5	600
							J, K1, RK1	600		L	800
							T	800		T	1200
225, 260, 400	C2	30	—	50	—	200	RK1, RK5, J, C, K1, K5	600	200	J, T, L, RK5	600
							L	800		L	1600
							T	1200			
40 ③, 80 ③, 100 ③, 150 ③, 200 ③	C3 ③, C5	30 ③	22 ③	50 ③	35 ③	200 ③	RK1, RK5, J, C, K1, K5	600	200 ③	RK1, RK5, J, C, K1, K5	600
							L	800		L	800
							T	1200		T	1200
225, 260, 400	C3, C5	30	50	50	65	200	RK1, RK5, J, C, K1, K5	600	200	J, T, L, RK5	600
							L	800		L	1600
							T	1200			
600, 800, 1000, 1200	C3, C5	50	50	65	65	200	J, T, L, RK5	600	200	J, T, L, RK5	600
							L	1600		L	1600
1600	C3, C5	50	—	65	—	200	J, T, L, RK5	600	—	—	—
							L	2000		—	—

Notes

① For open transition transfer switches rated 40–200 A (C2 switching mechanism) time duration is 0.025 sec maximum.

② For closed transition transfer switches rated 40–200 A (C3 switching mechanism) time duration is 0.025 sec maximum.

③ For closed transition transfer switches rated 40–100 A (C3 switching mechanism) or 150–200 A (C3 switching mechanism), the short-circuit withstand closing current ratings associated with a C2 switching mechanism apply.

5.2 Transfer Switches

Contactor-Based Transfer Switches

5

Dimensions

Approximate Dimensions in Inches (mm)

Contactor-Based Transfer Switch 40–1200 A—Dimensions and Approximate Shipping Weight

Ampere Rating	Enclosure	A (Height)	B (Width)	C (Depth)	Load Side, Normal and Standby Source	Neutral Connection	Weight in Lb (kg)
40–100 at 480 V ①	N1, N12, N3R	38.68 (982.5)	18.31 (465.1)	13.34 (338.8)	(1) #14–2/0	(3) #14–1/0	156 (71)
	N4X	37.50 (952.5)	17.50 (444.5)	14.34 (364.2)	(1) #14–2/0	(3) #14–1/0	156 (71)
40–100 at 600 V ①	N1, N12, N3R	38.68 (982.5)	18.31 (465.1)	13.34 (338.8)	(1) #14–2/0	(3) #14–1/0	164 (74)
	N4X	37.50 (952.5)	17.50 (444.5)	14.34 (364.2)	(1) #14–2/0	(3) #14–1/0	164 (74)
150–200 at 480 V ①	N1, N12, N3R	38.68 (982.5)	18.31 (465.1)	13.34 (338.8)	(1) #6–250 kcmil	(3) 1/0–250 kcmil	164 (74)
	N4X	37.50 (952.5)	17.50 (444.5)	14.34 (364.2)	(1) #6–250 kcmil	(3) 1/0–250 kcmil	164 (74)
150–200 at 600 V ①	N1, N12, N3R	52.00 (1321.0)	19.81 (503.2)	16.75 (425.5)	(1) #6–250 kcmil	(3) 1/0–250 kcmil	260 (118)
	N4X	52.00 (1321.0)	21.00 (533.4)	16.75 (425.5)	(1) #6–250 kcmil	(3) 1/0–250 kcmil	260 (118)
225–400 at 480 V ①	N1, N12, N3R	52.00 (1321.0)	19.81 (503.2)	16.75 (425.5)	(2) 3/0–250 kcmil (1) 3/0–600 kcmil	(6) 250–500 kcmil	260 (118)
	N4X	52.00 (1321.0)	21.00 (533.4)	16.75 (425.5)	(2) 3/0–250 kcmil (1) 3/0–600 kcmil	(6) 250–500 kcmil	260 (118)
225–1200 at 600 V ②	N1, N3R	79.41 (2017.0)	29.19 (741.4)	22.46 (570.5)	(4) 1/0–750 kcmil	(12) 1/0–750 kcmil	600 (272) three-pole 650 (295) four-pole
	N12, N4X	84.75 (2152.7)	29.00 (737.0) three-pole 29.00 (737.0) four-pole	24.26 (616.2)	(4) 1/0–750 kcmil	(12) 1/0–750 kcmil	700 (318) 750 (340)
600–1200 at 480 V ②	N1, N3R	79.41 (2017.0)	25.25 (641.4) three-pole 29.19 (741.4) four-pole	22.46 (570.5)	(4) 1/0–750 kcmil	(12) 1/0–750 kcmil	600 (272) three-pole 650 (295) four-pole
	N12, N4X	84.75 (2152.7)	29.00 (737.0) three-pole 29.00 (737.0) four-pole	24.26 (616.2)	(4) 1/0–750 kcmil	(12) 1/0–750 kcmil	700 (318) 750 (340)

Automatic, Non-Automatic Up to 400 A—Wallmount, N1 or N3R

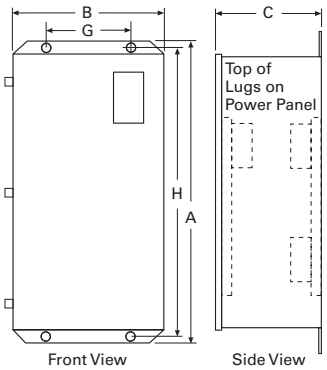

Notes

① Wallmount.

② Floorstanding and wall-secured—height dimension includes the bottom bracket.

REFERENCE ATS DRAWINGS FOR SPECIFIC DIMENSIONS

Automatic, Non-Automatic 600–1200 A Outline, N1 or N3R

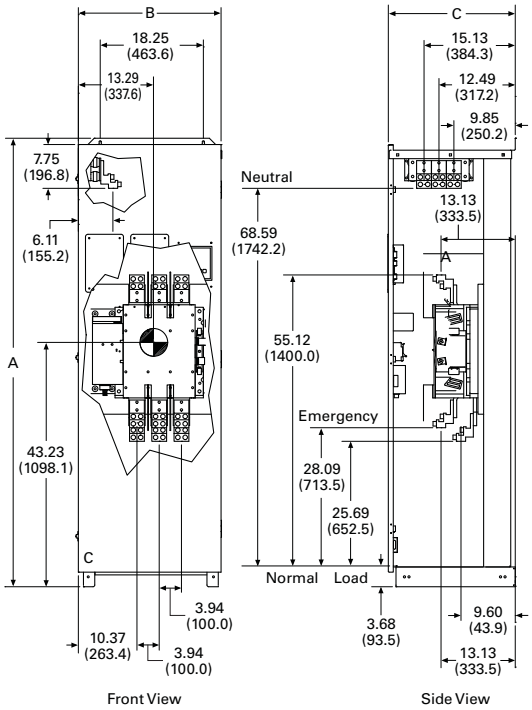

KOHLER. Power Systems

Approximate Dimensions in Inches (mm)

1600 A Transfer Switch

Ampere Rating	Enclosure	A (Height)	B (Width)	C (Depth)	Load Side, Normal and Standby Source	Neutral Connection	Weight in Lb (kg)
1600 A at 480 V ①	N1	90.00 (2286.0)	40.00 (1016.0)	28.73 (729.7)	(4) 1/0–750 kcmil	(12) 1/0–750 kcmil	730 (331) three-pole
	N3R	90.72 (2304.3)	40.35 (1024.9)	43.34 (1100.8)	(4) 1/0–750 kcmil	(12) 1/0–750 kcmil	780 (354) three-pole 830 (377) four-pole

Automatic, Non-Automatic Open Transition NEMA 1 Enclosure 1600 A

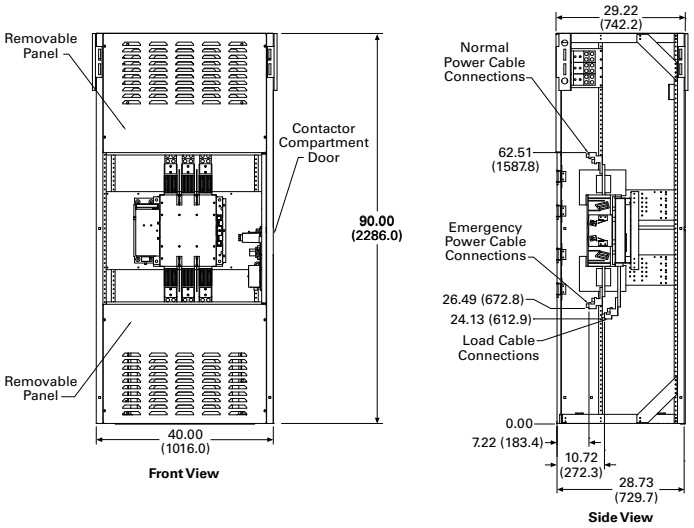

Automatic, Non-Automatic Open Transition NEMA 3R Enclosure 1600 A

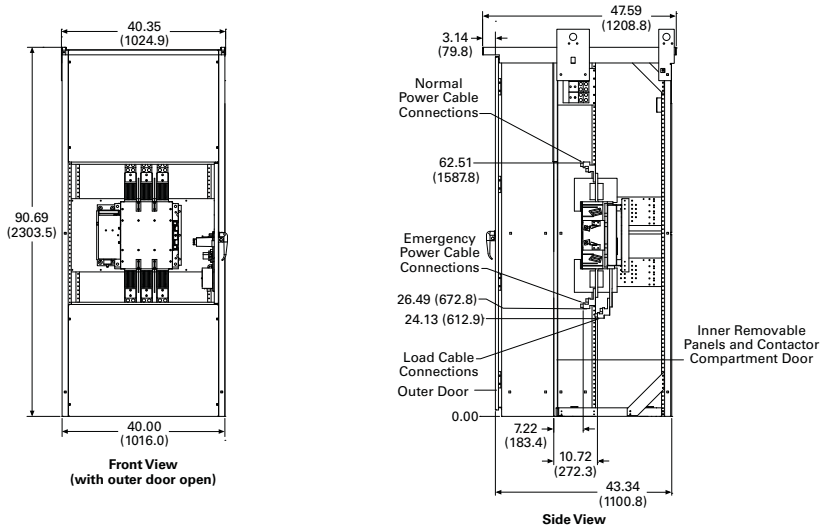

Note

① Freestanding.

ATC-300+ Controller

Contents

ATC-300+ Controller

Product Description

Transfer switches are equipped with the high-performance ATC-300+ digital transfer controller, receive rock-solid monitoring, status reporting and transfer control operation. Its superior design and robust construction make the ATC-300+ the industry benchmark for critical and distributed power systems.

Application Description

Eaton's ATC-300+ Controller-Based Automatic Transfer Switch is designed to provide unmatched performance, reliability and versatility for critical standby power applications.

Features, Benefits and Functions

Standard Features

- Source available indication:
  - Source 1
  - Source 2
- Switch position indication:
  - Source 1 position
  - Source 2 position
- Source 1 and Source 2 sensing:
  - Undervoltage/ underfrequency
  - Overvoltage/ overfrequency
  - Three-phase rotation protection
  - Three-phase voltage unbalance
- Field-programmable time delays
- LCD-based display for programming, system diagnostic and Help message display
- Mimic diagram with source available and connected LED indication
- Time-stamped history log
- Engine TEST pushbutton
- Programmable plant exerciser—OFF, daily, 7-, 14-, 28-day interval selectable run time 0–600 minutes no load/ load with fail-safe
- Modbus RTU communication
- Control Inputs: Go To Emergency (Source 2), Lockout, Monitor Mode
- Relay Outputs (Form C):
  - Pre-transfer, General Alarm
  - Bypass Time Delay pushbutton
  - Password protected access

Optional Features

- Suitable for use as service equipment in the standard enclosure size when used with breaker-based design transfer switches
- UL 1449 3rd Edition surge protection devices
- Integral overcurrent protection available when used with breaker-based design transfer switches
- Stainless steel cover for controller
- Manual retransfer from emergency to normal
- Load shed/emergency inhibit
- HMi Remote Annunciator Controller

5.7 Transfer Switches

Automatic Transfer Controllers

ATC-300+ Front Panel Display and Button Functions

Unit Status LED

Source 1, Source 2, and Load
Colored LED lights show status of both Sources and Load.

LCD Display
Provides visual indication of monitored parameters (voltage, frequency), status, set points, history, time/date.

Increase/Decrease
Allows user to adjust values when programming controller set points.

Engine Test Button
Pressing this button initiates an engine test.

Help
Pressing the Help button in any function mode will bring up display messages, explanations and prompts to assist the operator.

Lamp Test

Enter

Step Button
Permits user to scroll through information and set points.

Bypass Time Delays
Pressing the Enter and Help pushbuttons simultaneously reduces the active programmed time delay to zero to simplify test procedures.

The following set points are programmable if the corresponding feature is programmed.

ATC-300+ Programming Features/Set Points ①

Set Point	Set Point Units	Description	Range	Factory Default
TDES	Minutes: seconds	Time delay engine start	0–120 seconds	0:03
TDNE	Minutes: seconds	Time delay normal to emergency	0–1800 seconds	0:00
TDEN	Minutes: seconds	Time delay emergency to normal	0–1800 seconds	5:00
TDEC	Minutes: seconds	Time delay engine cool-off	0–1800 seconds	5:00
TDN	Minutes: seconds	Time delay neutral	0–120 seconds	0:00
PLANT EXER	Days	Plant exerciser programming	Off, daily, 7-day, 14-day or 28 day	Off
TEST MODE	—	Test Mode	0, 1 or 2 (0 = no load engine test, 1 = load engine test, 2 = disabled)	0
TER	Hours: minutes	Engine run test time	0–600 min	5:00
TPRE	Minutes: seconds	Pre-transfer delay timer	0–120 sec	0:00
PHASES	—	Three-phase or single-phase	1 or 3	As ordered
VOLT UNBAL	Volts	Voltage unbalanced	0 or 1 (1 = enabled)	1
UNBAL DROP %	Percent	Percent for unbalanced voltage dropout	5–20% of phase voltage unbalance	20%
UNBAL PICK %	Percent	Percent for unbalanced voltage pickup	Dropout minus (UNBAL DROP % –2) to 3%	10%
UNBAL DELAY	Seconds	Unbalanced delay timer	10–30	0:20
TDEF	Seconds	Time delay emergency fail timer	0–6 sec	6
PHASE REV	—	Phase reversal	OFF, ABC or CBA	OFF

Note

① Complete list of programming selections found in IB01602009E.

Standards and Certifications

- UL listed component
- Meets intent of UL 991, 1008
- Meets IEC 1000-4-2, 1000-4-3, 1000-4-4, 1000-4-5, 1000-4-6, 1000-4-11
- Meets CISPR 11, Class A
- Complies with FCC Part 15, Class A

Technical Data and Specifications

ATC-300+ Controller Specifications

Description		Specification
Input control voltage		65 to 145 Vac 50/60 Hz
Voltage measurements of		Source 1 V_{AB}, Source 1 V_{BC}, Source 1 V_{CA}, Source 2 V_{AB}, Source 2 V_{BC}, Source 2 V_{CA}
Voltage measurement range		0 to 790 Vac RMS (50/60 Hz)
Voltage measurement accuracy		±1% of full scale
Frequency measurements of		Source 1 and Source 2
Frequency measurement range		40 Hz to 70 Hz
Frequency measurement accuracy		±0.3 Hz over the measurement range
Undervoltage dropout range:	Breaker/switch style ATS	50 to 97% of the nominal system voltage
	Contactor style ATS	78 to 97% of the nominal system voltage
Undervoltage pickup range:	Breaker/switch style ATS	(Dropout +2%) to 99% of the nominal system voltage
	Contactor style ATS	(Dropout +2%) to 99% of the nominal system voltage
Overvoltage dropout range:	Breaker/switch style ATS	105 to 120% of the nominal system voltage
	Contactor style ATS	105 to 110% of the nominal system voltage
Overvoltage pickup range:	Breaker/switch style ATS	103% to (dropout –2%) of the nominal system voltage
	Contactor style ATS	103% to (dropout –2%) of the nominal system voltage
Underfrequency dropout range:	Breaker/switch style ATS	90 to 97% of the nominal system frequency
	Contactor style ATS	90 to 97% of the nominal system frequency
Underfrequency pickup range:	Breaker/switch style ATS	(Dropout +1Hz) to 99% of the nominal system frequency
	Contactor style ATS	(Dropout +1Hz) to 99% of the nominal system frequency
Overfrequency dropout range:	Breaker/switch style ATS	103 to 110% of the nominal system frequency
	Contactor style ATS	103 to 105% of the nominal system frequency
Overfrequency pickup range:	Breaker/switch style ATS	101% to (dropout –1 Hz) of the nominal system frequency
	Contactor style ATS	101% to (dropout –1 Hz) of the nominal system frequency
Operating temperature range		–20 °C to +70 °C (–4 °F to +158 °F)
Storage temperature range		–30 °C to +85 °C (–22 °F to +185 °F)
Operating humidity		0 to 95% relative humidity (noncondensing)
Operating environment		Resistant to ammonia, methane, nitrogen, hydrogen and hydrocarbons
Generator start relay		5 A, 1/6 Hp at 250 Vac
		5 A at 30 Vdc with a 150W maximum Load
K1, K2, pretransfer, alarm relays		10 A, 1–3 hp at 250 Vac
K3, K4		10 A at 30 Vdc
Applicable testing		UL recognized component
		Meets UL 1008
		Meets Intent of UL 991
		Meets IEC 1000-4-2, 1000-4-3, 1000-4-4, 1000-4-5, 1000-4-6, 1000-4-11
		Meets CISPR 11, Class A
		Complies with FCC Part 15, Class A
Enclosure compatibility		NEMA 1, NEMA 3R and NEMA 12
		UV resistant ATC-300+ faceplate

THIS PAGE INTENTIONALLY BLANK

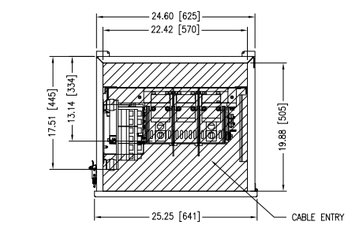

PLAN VIEW

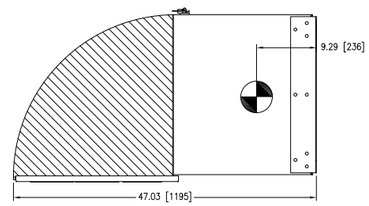

TOP VIEW

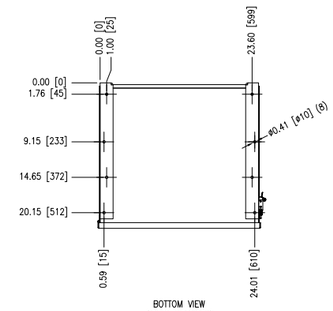

BOTTOM VIEW
(DOOR REMOVED)

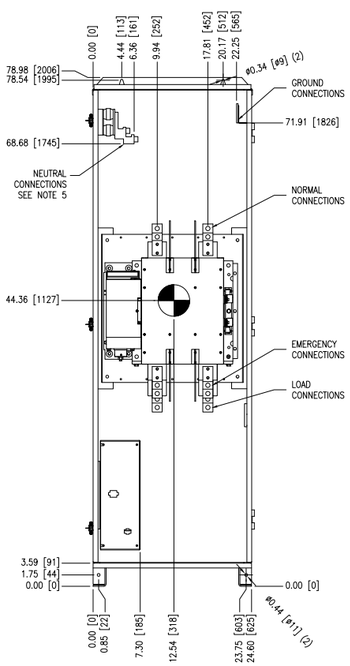

FRONT VIEW
(DOOR REMOVED)

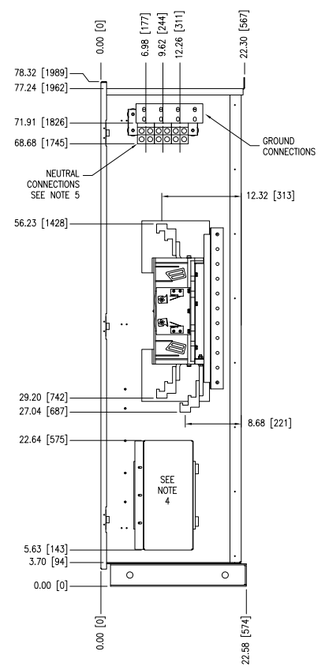

SIDE VIEW
(RIGHT SIDE REMOVED)

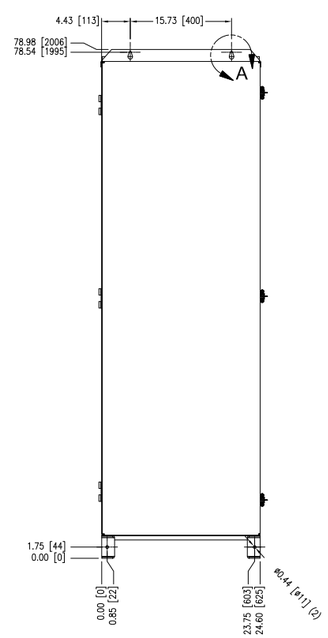

REAR VIEW
(DOOR REMOVED)

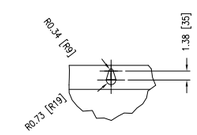

DETAIL A
SCALE 0.18 : 1

ATC3C5X20600WRU

AUTOMATIC OPEN TRANSFER CONTACTOR SWITCH
ATC-300+ CONTROL, 3 POSITION CONTACTOR
FIXED MOUNTED
2 POLE, 600 AMPS
240/120V 60HZ, 1 PHASE, 3 WIRE
TYPE-3R ENCLOSURE, UL 1008 LISTED

FEATURES INCLUDED:

1A	TIME DELAY NORMAL TO EMERGENCY ADJ 0-1800 sec
2A	TIME DELAY ENGINE START ADJ 0-120 sec
3A	TIME DELAY EMERGENCY TO NORMAL ADJ 0-1800 sec
4A	TIME DELAY ENGINE COOL-OFF ADJ 0-1800 sec
5J	EMERGENCY (S2) SENSING ALL PHASE UNDERVOLTAGE/UNDER FREQ
5K	EMERGENCY (S2) SENSING ALL PHASE OVERVOLTAGE/OVER FREQ
6B	ENGINE TEST PUSHBUTTON
7A	TIME DELAY ENGINE FAIL ADJ 0-6 sec
8C	BYPASS TIME DELAY EMERGENCY TO NORMAL
8D	BYPASS TIME DELAY NORMAL TO EMERGENCY
12C	NORMAL (S1) CONNECTED INDICATION
12D	EMERGENCY (S2) CONNECTED INDICATION
12G	NORMAL (S1) PRESENT INDICATION
12H	EMERGENCY (S2) PRESENT INDICATION
14L	AUX RELAY CONTACTS NORMAL (S1) PRESENT 2 FORM C
14M	AUX RELAY CONTACTS EMERGENCY (S2) PRESENT 2 FORM C
15E	POSITION INDICATION CONTACT NORMAL (S1) 1 FORM C
15F	POSITION INDICATION CONTACT EMERGENCY (S2) 1 FORM C
22	GROUND BAR
23K	PLANT EXERCISER 7/14/28 DAY LOAD/NO LOAD 0-600 min
26D	GO TO EMERGENCY (S2) INPUT
26J	NORMAL (S1) SENSING ALL PHASE UNDERVOLTAGE/UNDER FREQ
26K	NORMAL (S1) SENSING ALL PHASE OVERVOLTAGE/OVER FREQ
32D	IN-PHASE TRANSITION DEFAULTS TO TIME DELAY NEUTRAL
35A	PRE-TRANSFER SIGNAL CONTACTS 1 FORM C
41A	100 WATT SPACE HEATER WITH THERMOSTAT
42	IBC/CBC SEISMIC QUALIFIED
48F	COMMUNICATIONS MODBUS
49C	MULTI-TAP VOLTAGE TRANSFORMER
81A	GENERAL ALARM INDICATION CONTACT

REQUIRED FOR SEISMIC, RECOMMENDED FOR ALL APPLICATIONS:
USE 4, 5/16-13 UNC GRADE 5 OR BETTER HEX HEAD BOLTS AND WASHERS. THESE BOLTS ARE TO BE TORQUED TO 75 FT. LBS. (102 NM).

TERMINALS:
NORMAL: (2) 1/0-750 CU/AL PER POLE
EMERGENCY: (2) 1/0-750 CU/AL PER POLE
LOAD: (2) 1/0-750 CU/AL PER POLE
NEUTRAL: (12) 1/0-750 CU/AL

NOTES:
1 APPROXIMATE SHIPPING WEIGHT = 590 LBS [268 KG]
2 DIMENSIONS SHOWN IN INCHES [MILLIMETERS]
3 CONTROLS PROVIDED BASED ON CUSTOMER ORDER INFORMATION.
4 TRANSFORMER INCLUDED
5 FOR SWITCHED NEUTRAL APPLICATIONS CONNECT TO TERMINALS MARKED 'NN', 'EN', AND 'TN'. NEUTRAL ASSEMBLY IS NOT PROVIDED. FOR 1 PHASE 2 WIRE SYSTEMS NEUTRAL ASSEMBLY IS NOT PROVIDED.

CG CENTER OF GRAVITY

DFTR NICHOLAS GRAVES	DATE 8/26/2021	THE INFORMATION ON THIS DOCUMENT WAS CREATED BY EATON CORPORATION. IT WAS DISCLOSED IN CONFIDENCE AND IS ONLY TO BE USED FOR THE PURPOSE IN WHICH IT WAS SUPPLIED.	EATON
APPD	DATE	TITLE AUTOMATIC OPEN TRANSFER | CONTACTOR SWITCH 480V 3 POSITION | 40-1200 AMP | ATC-300+ CONTROLLER	
PRODUCT CODE AT	S.O.	TYPE ATC3C5X20600WRU	OUTLINE
DESIGNATION Q House	CAGE CODE 88725	REVISION 1	G.O. –	DWG Q House-01	SHEET 1 OF 6

COEFtBL_R7

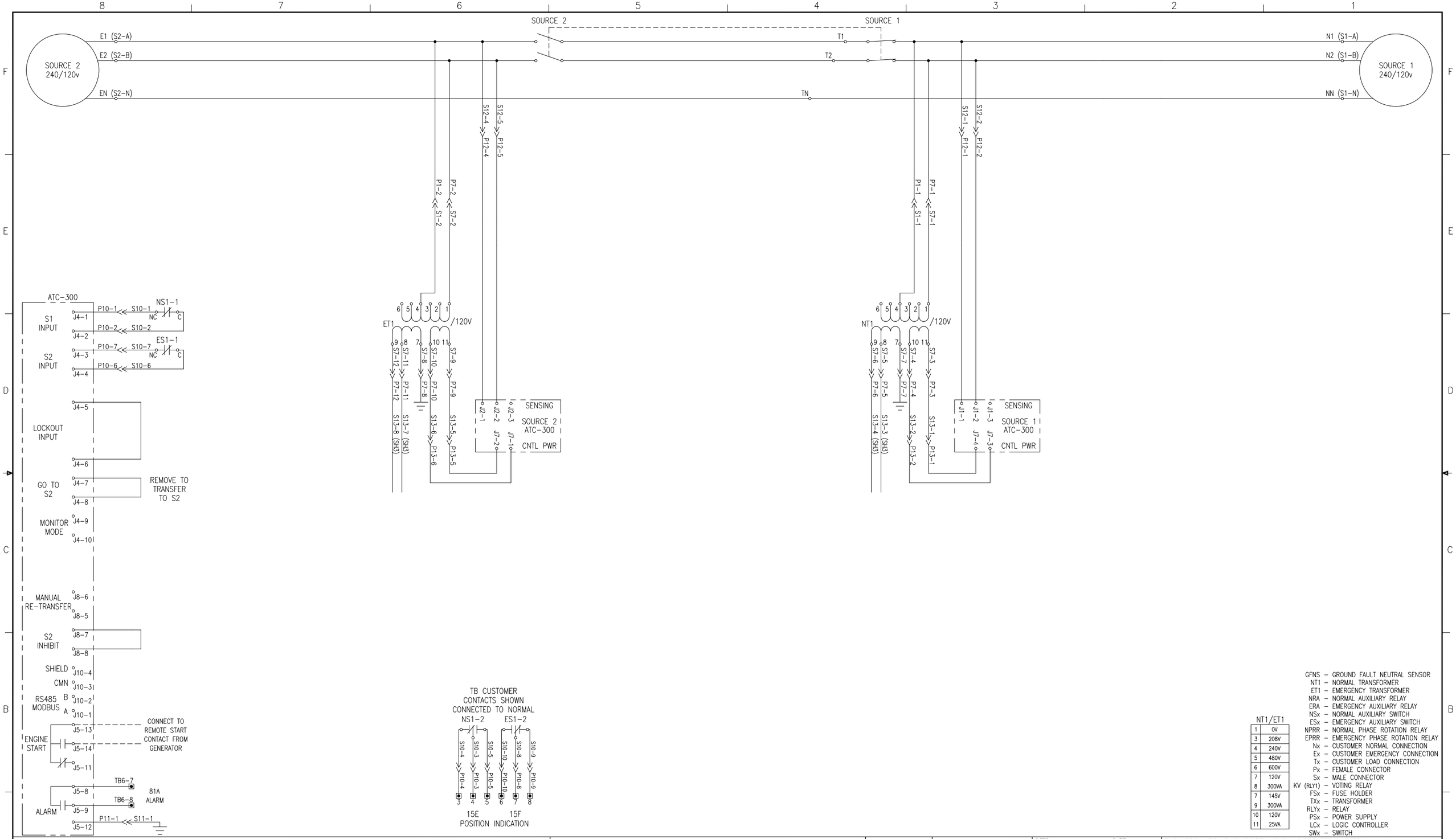

NT1/ET1	
1	0V
3	208V
4	240V
5	480V
6	600V
7	120V
8	300VA
7	145V
9	300VA
10	120V
11	25VA

GFNS – GROUND FAULT NEUTRAL SENSOR
NT1 – NORMAL TRANSFORMER
ET1 – EMERGENCY TRANSFORMER
NRA – NORMAL AUXILIARY RELAY
ERA – EMERGENCY AUXILIARY RELAY
NSx – NORMAL AUXILIARY SWITCH
ESx – EMERGENCY AUXILIARY SWITCH
NPRR – NORMAL PHASE ROTATION RELAY
EPRR – EMERGENCY PHASE ROTATION RELAY
Nx – CUSTOMER NORMAL CONNECTION
Ex – CUSTOMER EMERGENCY CONNECTION
Tx – CUSTOMER LOAD CONNECTION
Px – FEMALE CONNECTOR
Sx – MALE CONNECTOR
KV (RLY1) – VOTING RELAY
FSx – FUSE HOLDER
TXx – TRANSFORMER
RLYx – RELAY
PSx – POWER SUPPLY
LCx – LOGIC CONTROLLER
SWx – SWITCH

DFTR NICHOLAS GRAVES	DATE 8/26/2021	THE INFORMATION ON THIS DOCUMENT WAS CREATED BY EATON CORPORATION. IT WAS DISCLOSED IN CONFIDENCE AND IS ONLY TO BE USED FOR THE PURPOSE IN WHICH IT WAS SUPPLIED.	EATON
APPD	DATE	TITLE AUTOMATIC OPEN TRANSFER | CONTACTOR SWITCH 480V 3 POSITION | 40–1200 AMP | ATC–300+ CONTROLLER	
PRODUCT CODE AT	S.O. F0030816X1K1	TYPE ATC3C5X20600WRU	SCHEMATIC
DESIGNATION Q House	CAGE CODE 88725	REVISION 1	G.O. –	DWG Q House–S1	SHEET 2 OF 6

COEFtBL_R7

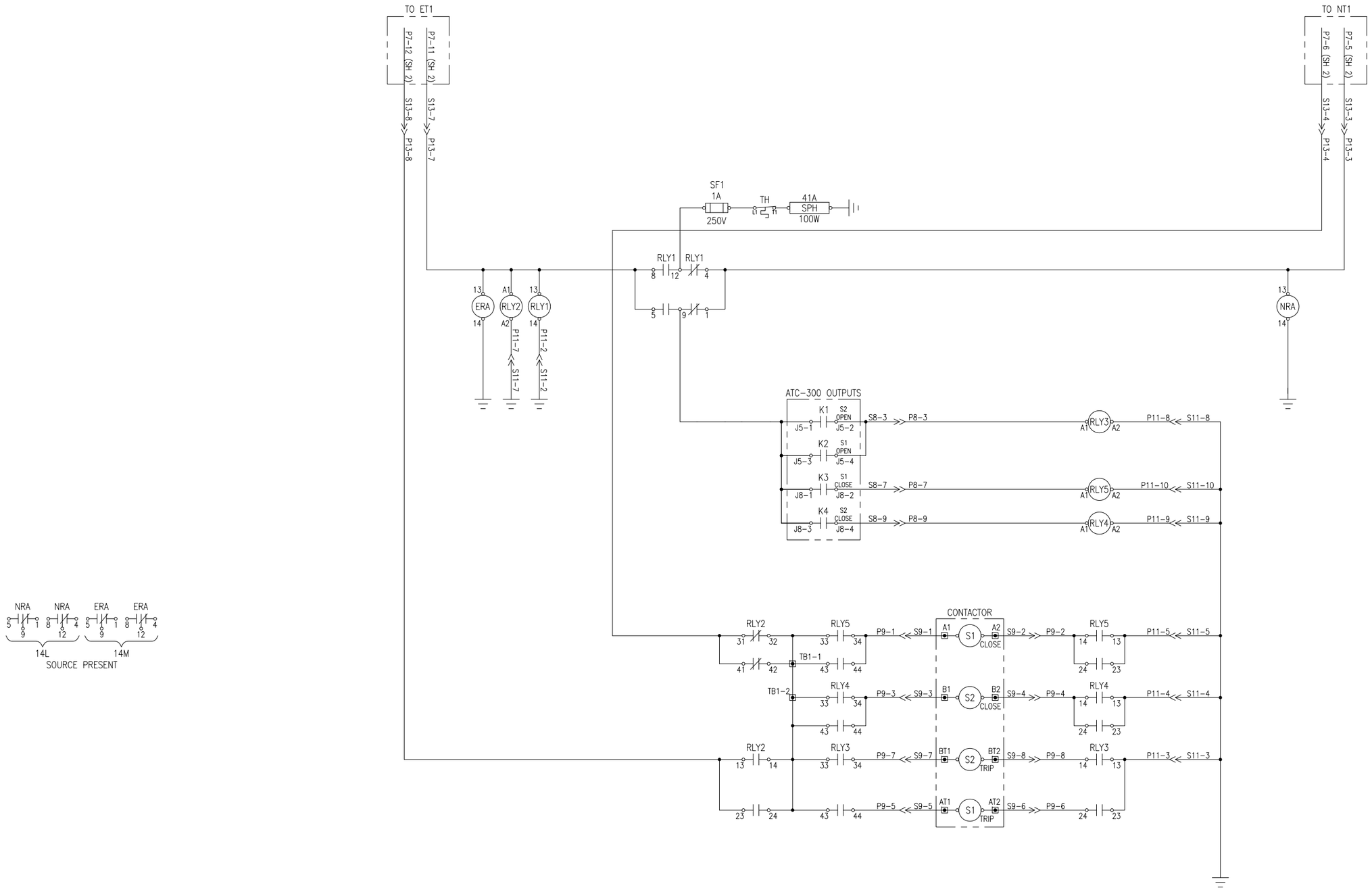

DFTR NICHOLAS GRAVES	DATE 8/26/2021	THE INFORMATION ON THIS DOCUMENT WAS CREATED BY EATON CORPORATION. IT WAS DISCLOSED IN CONFIDENCE AND IS ONLY TO BE USED FOR THE PURPOSE IN WHICH IT WAS SUPPLIED.	EATON
APPD	DATE	TITLE AUTOMATIC OPEN TRANSFER | CONTACTOR SWITCH 480V 3 POSITION | 40-1200 AMP | ATC-300+ CONTROLLER	
PRODUCT CODE AT	S.O. F0030816X1K1	TYPE ATC3C5X20600WRU	SCHEMATIC
DESIGNATION Q House	Page 109 of 137	CAGE CODE 88725	REVISION 1	G.O. –	DWG Q House-S2	SHEET 3 OF 6

COEFtBL_R7

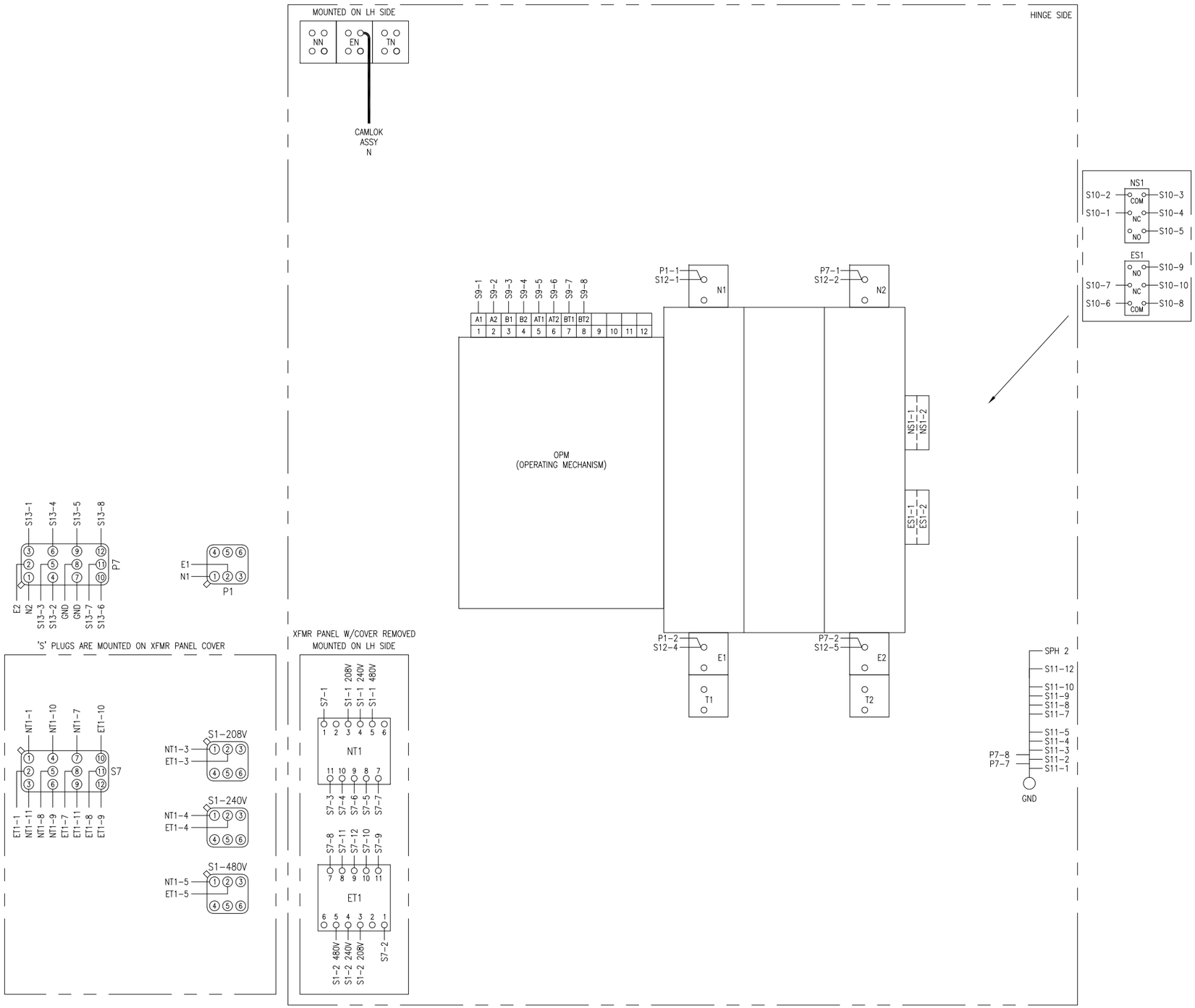

DESIGNATION: Q House	CAGE CODE: 88725	DFTR: NICHOLAS GRAVES	DATE: 8/26/2021
		APPD	DATE
		PRODUCT CODE: AT	S.O.: F0030816X1K1
		REVISION: 1	

TITLE: AUTOMATIC OPEN TRANSFER | CONTACTOR SWITCH
480V 3 POSITION | 40-1200 AMP | ATC-300+ CONTROLLER

TYPE: ATC3C5X20600WRU — DIAGRAM

G.O.: – | DWG: Q House-W1 | SHEET: 4 OF 6

COEFtBL_R7

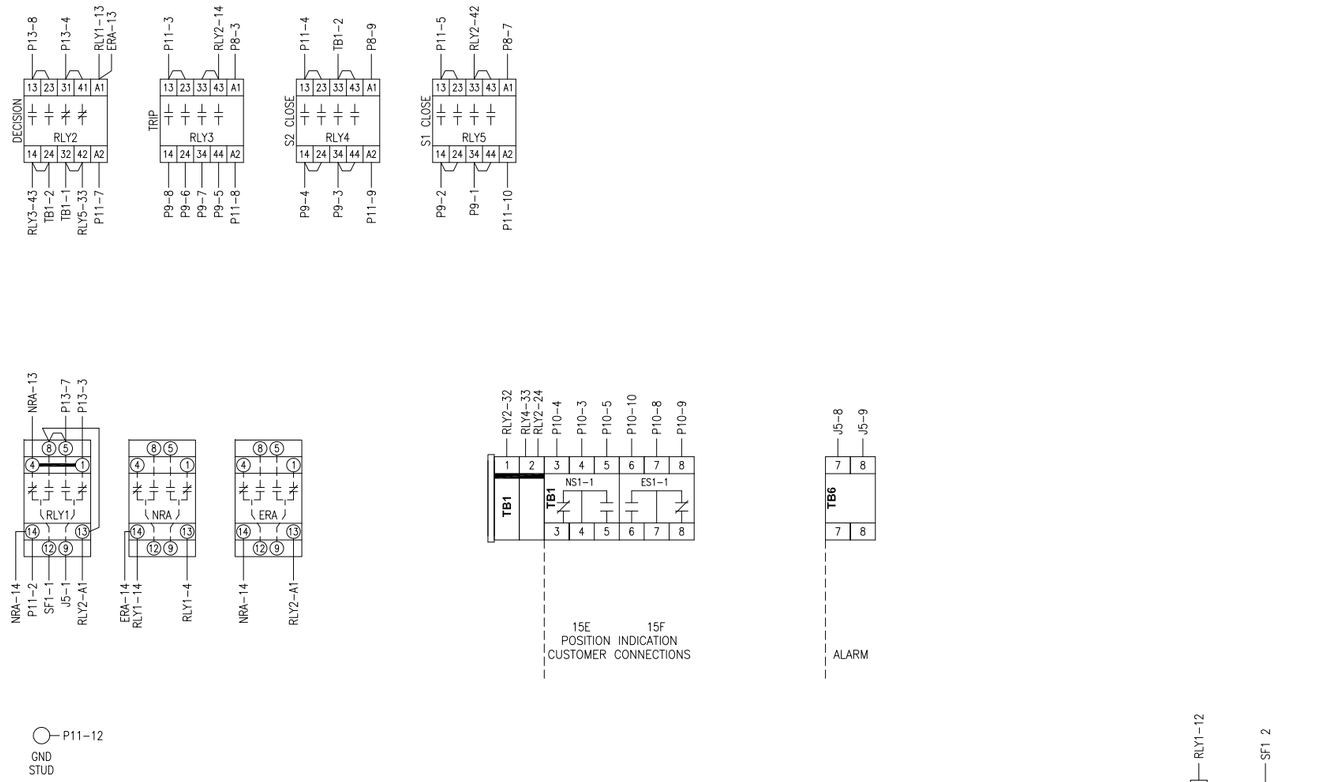

DFTR NICHOLAS GRAVES	DATE 8/26/2021	THE INFORMATION ON THIS DOCUMENT WAS CREATED BY EATON CORPORATION. IT WAS DISCLOSED IN CONFIDENCE AND IS ONLY TO BE USED FOR THE PURPOSE IN WHICH IT WAS SUPPLIED.	EATON
APPD	DATE	TITLE AUTOMATIC OPEN TRANSFER | CONTACTOR SWITCH 480V 3 POSITION | 40–1200 AMP | ATC–300+ CONTROLLER	
PRODUCT CODE AT	S.O. F0030816X1K1	TYPE ATC3C5X20600WRU	DIAGRAM
DESIGNATION Q House			
CAGE CODE 88725	REVISION 1	G.O. –	DWG Q House–W2
			SHEET 5 OF 6

COEFtBL_R7

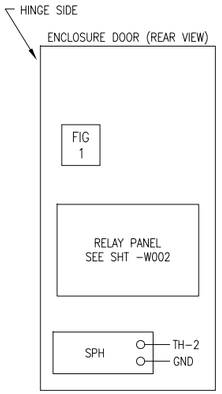

**REFER TO ENCLOSURE DOOR REAR VIEW FOR DEVICE PLACEMENT

**FIG 1

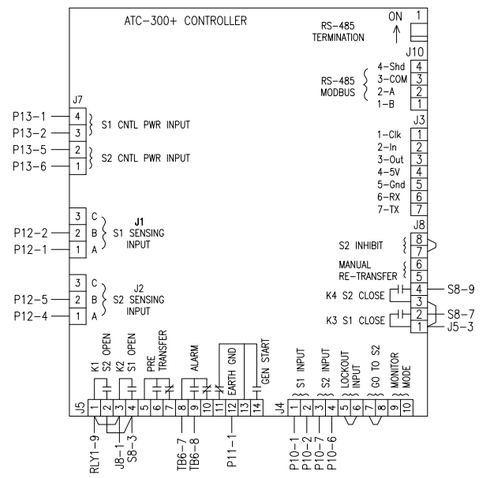

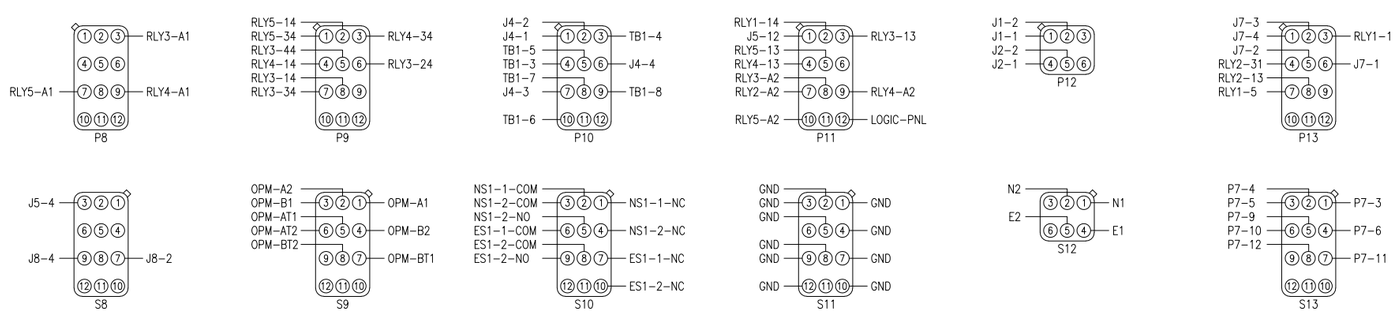

DFTR NICHOLAS GRAVES	DATE 8/26/2021	THE INFORMATION ON THIS DOCUMENT WAS CREATED BY EATON CORPORATION. IT WAS DISCLOSED IN CONFIDENCE AND IS ONLY TO BE USED FOR THE PURPOSE IN WHICH IT WAS SUPPLIED.	EATON
APPD	DATE	TITLE AUTOMATIC OPEN TRANSFER | CONTACTOR SWITCH 480V 3 POSITION | 40-1200 AMP | ATC-300+ CONTROLLER	
PRODUCT CODE AT	S.O. F0030816X1K1	TYPE ATC3C5X20600WRU	DIAGRAM
DESIGNATION Q House	CAGE CODE 88725	REVISION 1	G.O. –	DWG Q House-W3	SHEET 6 OF 6

COEFtBL_R7

SECTION SEVEN

GENERATOR SET DRAWINGS

THIS PAGE INTENTIONALLY BLANK

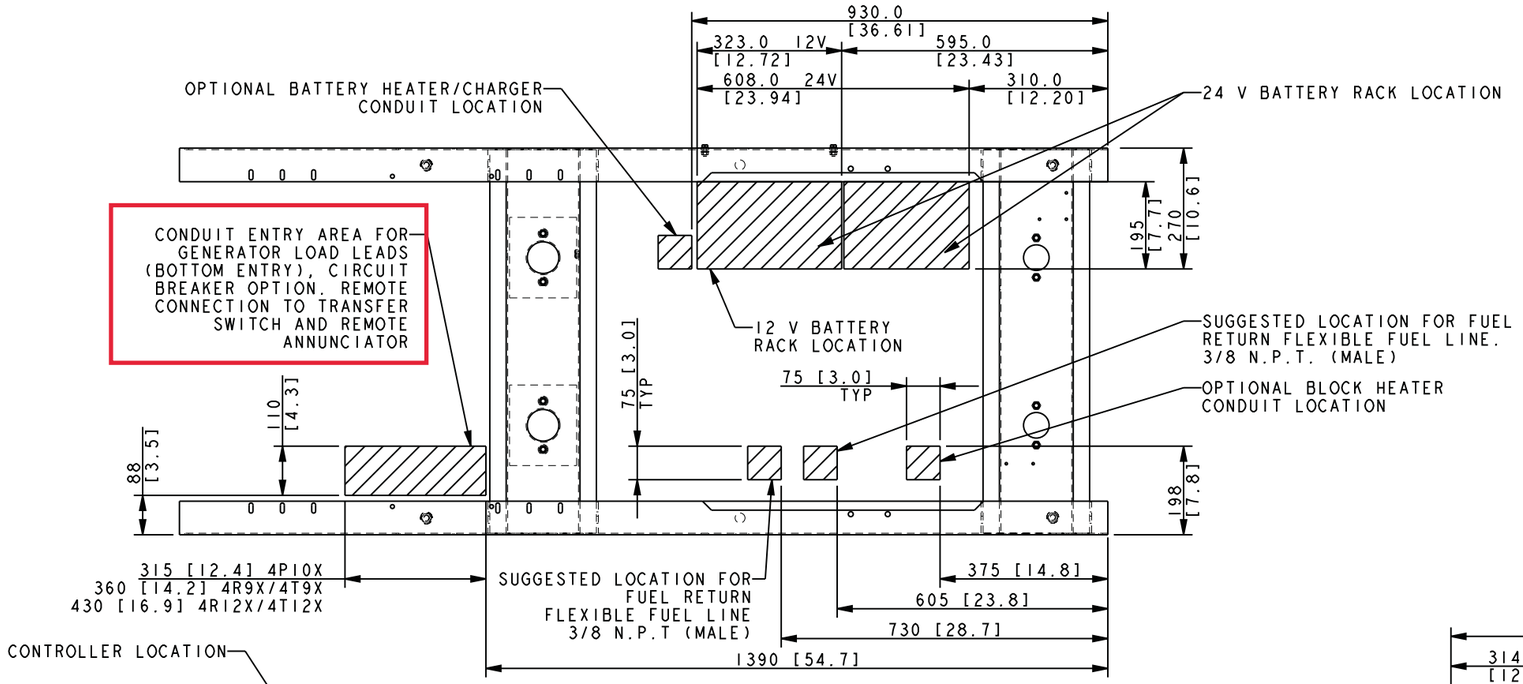

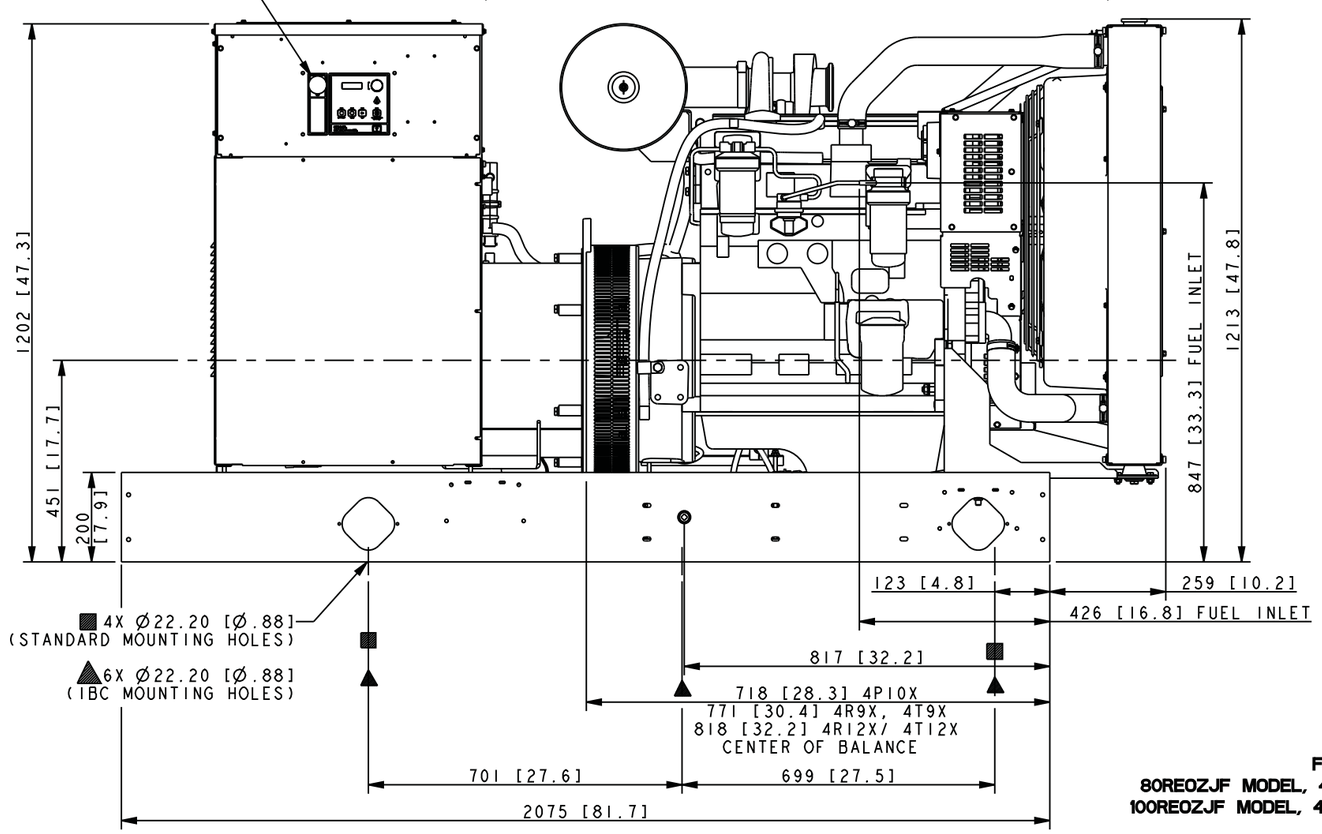

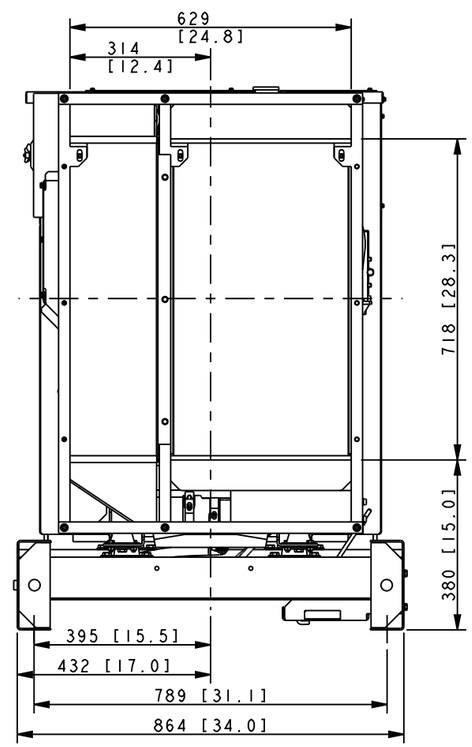

INSTALLATION NOTE

IF SUBBASE FUEL TANK AND/OR SOUND HOUSING IS USED, REFER TO SUBBASE FUEL TANK DRAWING TO DETERMINE MOUNTING LOCATIONS

MODEL	GENSET WEIGHT (WET)
80 4P10X	973 KG [2145 LBS]
80 4R9X, 4T9X 100 4R9X	1056 KG [2328 LBS]
100 4R12X, 4T12X	1119 KG [2468 LBS]

NOTES
DIMENSIONS IN [ ] ARE ENGLISH EQUIVALENTS.

IF AN ENCLOUSRE IS USED, THE FUEL LINE MUST BE STUBBED UP FROM DIRECTLY UNDER THE UNIT OR BROUGHT IN FROM THE END OF THE SKID. REFER TO ENCLOUSER ADV.

IF IBC CERTIFICATION IS REQUIRED SEE SEISMIC ADV FOR INSTALLATION INSTRUCTIONS.

FOR OPEN GENSETS
80REOZJF MODEL, 4P10X, 4R9X, 4T9X
100REOZJF MODEL, 4R9X, 4R12X, 4T12X
RECONNECTABLE
IMPROVE MOTOR STARTING (IMS) RECONNECTABLE
600V & 1 PHASE ALTERNATORS
4045HF285 JOHN DEERE, TIER III

REV	DATE	ON COMPOSITE DWGS, SEE PART NO. FOR REVISION LEVEL	BY
-	5-12-11	NEW DRAWING [91379-4]	KMP

UNLESS OTHERWISE SPECIFIED - 1) DIMENSIONS ARE IN MILLIMETERS 2) TOLERANCES ARE: X.XX ± 0.25 X.X ± 1.0 X ± 1.5 ANGLES ± 0° 30' SURFACE FINISH MAX.

THIRD ANGLE PROJECTION

APPROVALS		DATE
DRAWN	KMP	5-12-11
CHECKED	PLD	5-12-11
APPROVED	GDF	5-12-11

KOHLER CO. METRIC | PRO-E
POWER SYSTEMS, KOHLER, WI 53044 U.S.A.

TITLE
DIMENSION PRINT 80-100 MODEL

SCALE 0.15 | CAD NO. | SHEET 1 of 4
DWG NO. **ADV-8181** | D

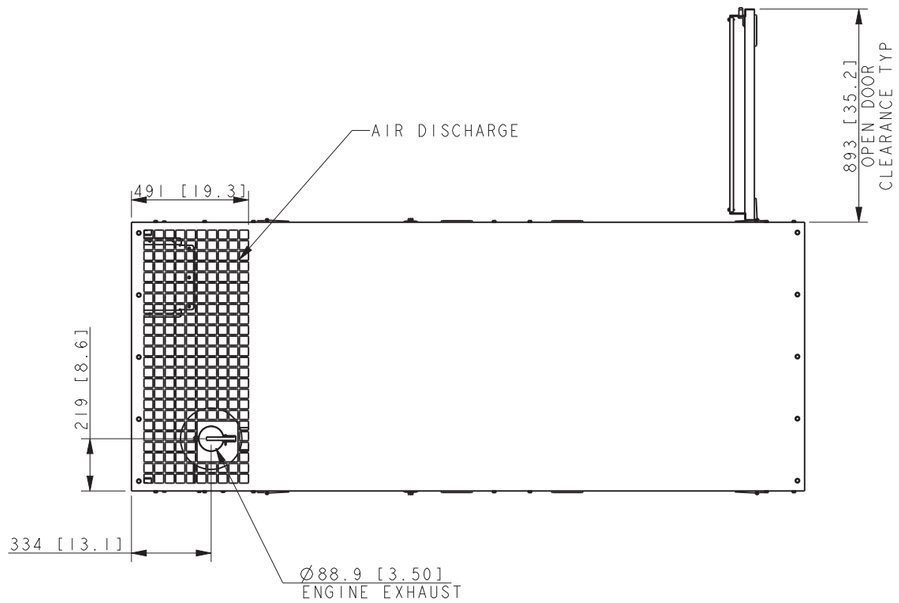

MODEL	ENCLOSURE WEIGHT KG [LBS]
STEEL WEATHER	318 [700]
STEEL SOUND	329 [725]
ALUMINIUM SOUND	204 [450]

NOTE:
1. IF TANK IS ORDERED, ENCLOSURE MOUNTS DIRECTLY TO TANK
2. TANK MAY EXTEND BEYOND ENCLOSURE (DISCHARGE END ONLY)

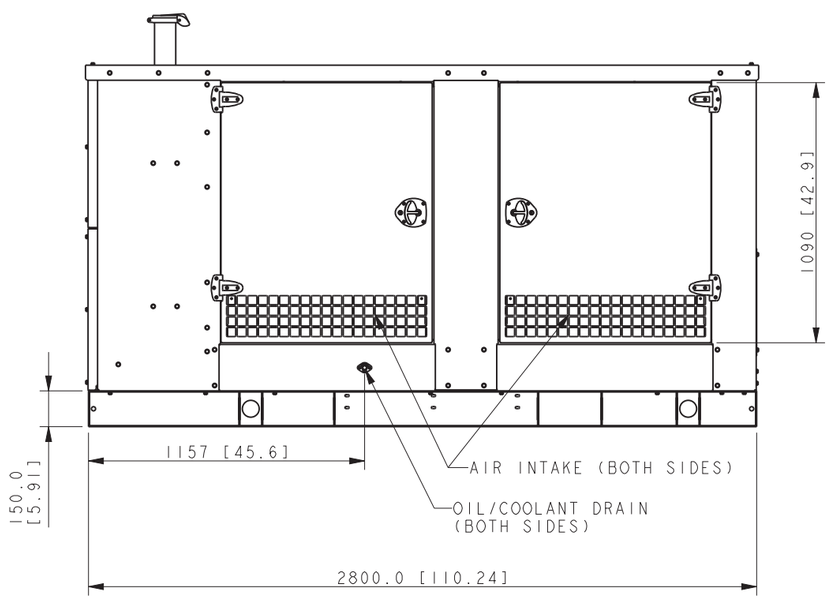

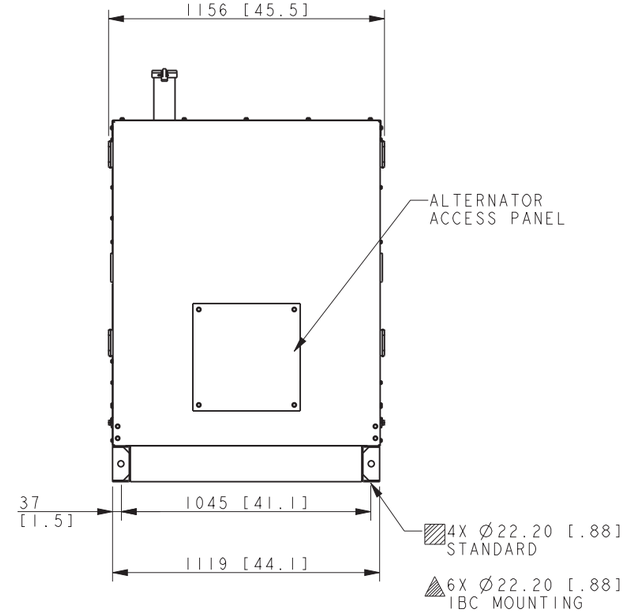

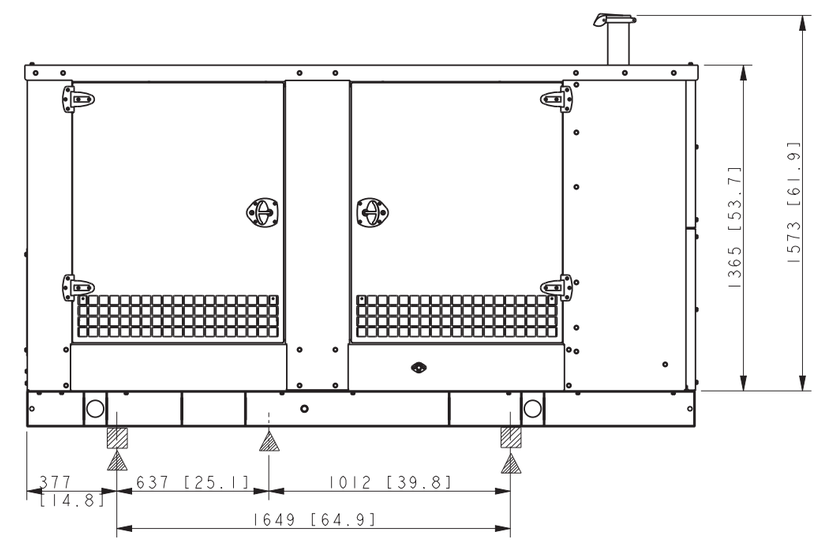

80 MODEL 4S7, 4S9, 4V9, 4P10X, 4R9X, 4T9X
100 MODEL 4S9, 4S11, 4V11, 4R9X, 4R12X, 4T12X
RECONNECTABLE
IMPROVE MOTOR STARTING (IMS) RECONNECTABLE
600V & 1 PHASE ALTERNATORS
4045HF285 JOHN DEERE TIER III

REV	DATE	ON COMPOSITE DWGS, SEE PART NO. FOR REVISION LEVEL	BY
B	9-28-10	(A-4) 6X Ø22.20 ADDED, 4X Ø22.20 WAS 4X Ø25.4 *A-3) DIM 635 AND 1014 ADDED [90301]	SAM
C	1-31-11	(A-7) 1159 WAS 1084 [90327]	SAM
D	12-22-11	(A-4) 4P10X, 4R9X, 4T9X ADDED TO 80 MODEL, 4R9X, 4R12X, 4T12X ADDED TO 100 MODEL [92681]	PKD
E	2-4-13	(A-1) 1-2 WAS 1-2, SEE SHEET 2 [CT32174]	SAM
F	10-12-17	(C-7) DIM. Ø88.9 [3.50] ADDED [CT177004]	SRM

UNLESS OTHERWISE SPECIFIED -
1) DIMENSIONS ARE IN MILLIMETERS
2) TOLERANCES ARE:
X.XX ± 0.25
X.X ± 1.0
X ± 1.5
ANGLES ± 0° 30'
SURFACE FINISH MAX.
THIRD ANGLE PROJECTION

APPROVALS		DATE
DRAWN	KDW	7-9-09
CHECKED	KDW	7-9-09
APPROVED	ALC	7-9-09

KOHLER CO. METRIC | PRO-E

POWER SYSTEMS, KOHLER, WI 53044 U.S.A.

TITLE
DIMENSION PRINT

SCALE 0.08 | CAD NO. | SHEET 1 of 2
DWG NO. **ADV-7647** | D

MODEL	CAPACITY		WEIGHT		HEIGHT	
	LITERS	GAL	KG	LBS	MM	IN
80/100kW	815	215	595	1312	431.8	17.0
80/100kW	1570	415	835	1840	762.0	30.0

TANK FITTINGS:

A. 4" NPT EMERGENCY VENT FITTING PER NFPA 30 WITH VENT CAPS (QTY 2)
B. 2" NPT FUEL FILL FITTING WITH LOCKABLE CAP & 2" RISER
C. 2" NPT ADDITIONAL FITTING FOR OPTIONAL ACCESSORY (INSTALL STEEL 2" NPT PIPE PLUG)
D. 2" NORMAL VENT FITTING WITH MUSHROOM VENT CAP AND 5" RISER
E. 2" NPT FITTING FOR REMOVABLE ENGINE SUPPLY DIP TUBE (3/8" NPT FEMALE WITH CHECK VALVE)
F. 2" NPT FITTING FOR REMOVABLE FUEL RETURN DIP TUBE (3/8" NPT FEMALE)
H. 2" NPT FUEL LEVEL SENDING UNIT
J. 2" NPT ADDITIONAL FITTING FOR OPTIONAL ACCESSORY (INSTALL STEEL 2" NPT PIPE PLUG)
K. 2" FUEL LEVEL GAUGE FITTING W/DIRECT READING MECHANICAL GAUGE
M. 2" NPT BASIN DRAIN (INSTALL STEEL 2" NPT PIPE PLUG)
N. 2" NPT FOR FUEL IN BASIN SWITCH (INSTALL STEEL 2" NPT PIPE PLUG)
P. 2" NPT ADDITIONAL FITTING FOR OPTIONAL ACCESORY (INSTALL STEEL 2" PIPE PLUG)

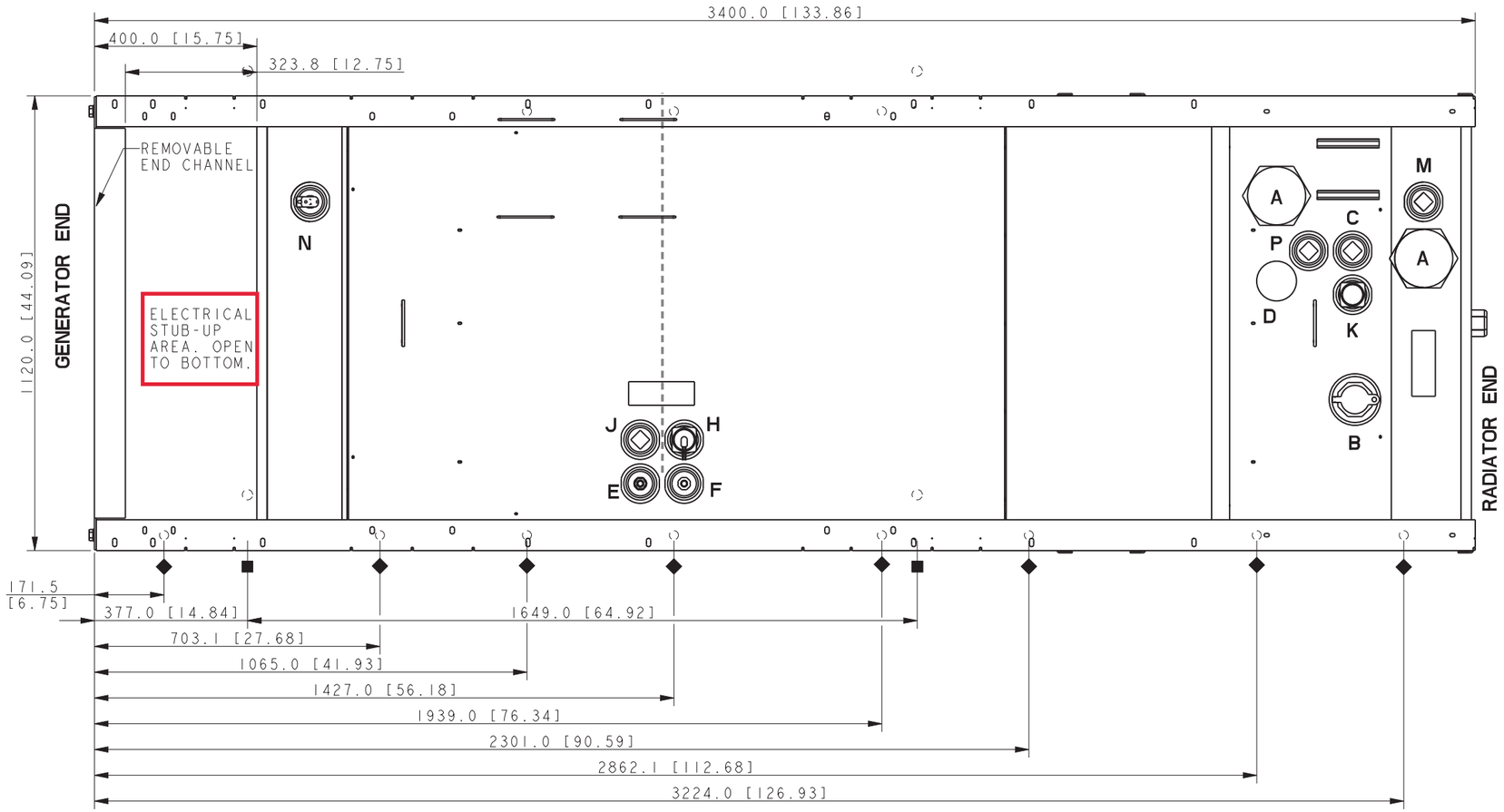

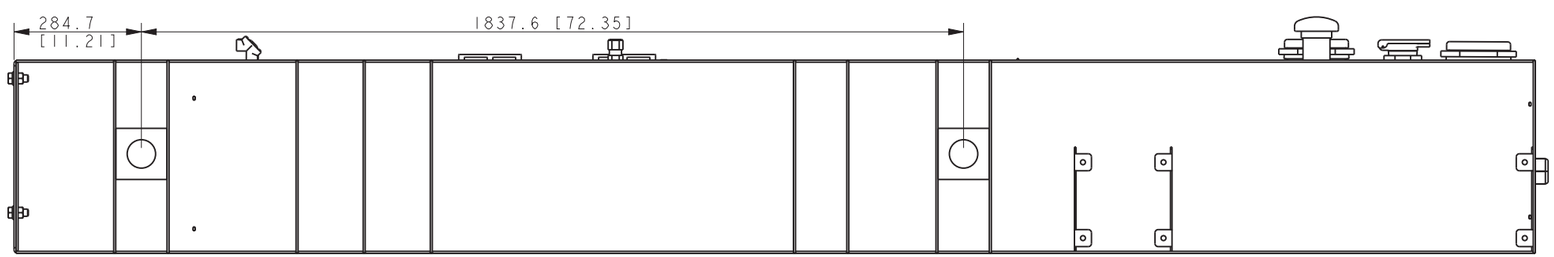

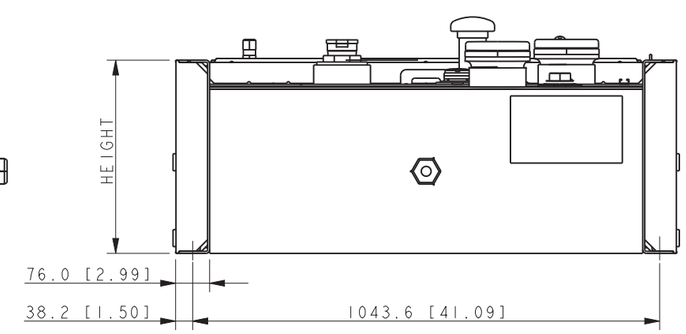

NOTE:
FOR FURTHER TANK DETAIL SEE INDIVIDUAL DRAWINGS

■ 4X Ø25.4 [1.00] STANDARD MOUNTING

◆ 16X Ø22.2 [0.875] IBC MOUNTING

STATE TANK

80 MODEL 4S7, 4S9, 4V9, 4P10X, 4R9X, 4T9X
100 MODEL 4S9, 4S11, 4V11, 4R9X, 4R12X, 4T12X
RECONNECTABLE
IMPROVE MOTOR STARTING (IM5) RECONNECTABLE
600V & 1 PHASE ALTERNATORS
4045HF285 JOHN DEERE, TIER III

REV	DATE	ON COMPOSITE DWGS, SEE PART NO. FOR REVISION LEVEL	BY
-	9-12-12	NEW DRAWING [CT23454]	JB2
A	1-25-18	(D-2) FITTING NOTES M & N 2"NPT WAS 1/2"NPT,	
		SEE SHEET 2 [CT182424]	JB2
B	2-22-18	SEE SHEET 2 [CT184812]	PAS
C	12-5-19	SEE SHEET 2 [CT200428]	YBY

UNLESS OTHERWISE SPECIFIED:
1) DIMENSIONS ARE IN MILLIMETERS
2) TOLERANCES ARE:
X.XX ± 0.25
X.X ± 1.0
X ± 1.5
ANGLES ± 0° 30'
SURFACE FINISH MAX.
THIRD ANGLE PROJECTION

APPROVALS		DATE
DRAWN	JB2	9-12-12
CHECKED	JB2	9-12-12
APPROVED	AJD	9-12-12

KOHLER CO. METRIC PRO-E
POWER SYSTEMS, KOHLER, WI 53044 U.S.A.

TITLE **DIMENSION PRINT, SUBBASE TANK, STATE**

SCALE 0.15 | CAD NO. | SHEET 1 of 2
DWG NO. **ADV-8522** | **D**

SR. NO.	PART NO.	DESCRIPTION	OPTION	FIELD
1	XXXXXX	BATTERY CABLE POSITIVE	–	–
2	XXXXXX	BATTERY CABLE NEGATIVE	–	–
3	GM105222	80–125KW CONTROL BOX HARNESS	–	–
4	GM79686	ENGINE HARNESS (80–125 KW)	–	–
4	GM79691	ENGINE HARNESS (150–180 KW)	–	–
4	GM79931	ENGINE HARNESS (200 KW)	–	–
4	GM75862	ENGINE HARNESS (230–300 KW)	–	–
5	XXXXXX	.	–	–
6	GM105367	COMMON FAILURE RELAY	X	X
7	GM105366	15 RELAY DRY CONTACT	X	X
8	GM105663	RUN/OFF/AUTO KEYSWITCH	X	X
9	GM105368	CURRENT SENSE HARNESS	–	–
10	(GM105222)	VOLTAGE SENSE HARNESS	–	–
11	XXXXXX	.	–	–
12	GM105369	SHUNT TRIP RELAY HARNESS	X	X
13	GM105370	GROUND FAULT HARNESS	X	X
14	GM105371	LOCAL MOTORIZED BREAKER HARNESS	X	–
15	GM105373	REMOTE MOTORIZED BREAKER HARNESS	X	X
16	XXXXXX	FUEL LEVEL SENDER HARNESS	–	–
17	XXXXXX	FUEL LEAK ALARM HARNESS	–	–

LEGEND

BCA – BATTERY CHARGING ALTERNATOR
BTCS – BATTERY TEMP COMPENSATION SENSOR
CACT – CHARGE AIR COOLER OUTLET TEMP
CAS – CAM SENSOR
CIT – COMPRESSOR INLET TEMP
CLS – COOLANT LEVEL SENDER
CRS – CRANK SENSOR
CT(#) – CURRENT TRANSFORMER
CTS – COOLANT TEMPERATURE SENDER
D(#) – DIODE
DIAG – DIAGNOSTIC LAMP
ECM – ENGINE CONTROL MODULE
EGR – EXHAUST GAS RECIRCULATION VALE
EGRT – EXHAUST GAS RECIRCULATION TEMP
ESS – EMERGENCY STOP SWITCH
FIC – FUEL INJECTOR CONTROLLER
FLA – FUEL LEAK ALARM
FLS – FUEL LEVEL SENDER
FPC – FUEL PUMP CONNECTOR
FTS – FUEL TEMP SENDER
GPR – GLOW PLUG RELAY
LCT – LOW COOLANT TEMPERATURE SWITCH
MAP – MANIFOLD AIR PRESSURE
MAT – MANIFOLD AIR TEMP SENSOR
OPS – OIL PRESSURE SENDER
P(#) – PLUG
PCV – POSITIVE CRANCRASE VENT VALVE
QCON(#) – QUICK CONNECT
RPS – RAIL PRESSURE SENSOR
SLB – STATIONARY LED BOARD
SM – STARTER MOTOR
SS – STARTER SOLENOID
STAT – STATOR
SW(#) – SWITCH
TB(#) – TERMINAL BLOCK
TSS – TURBO SPEED SENSOR
VGT – VARIABLE GEOMETRY TURBO
W(#) – WIRE WELD
WFS – WATER IN FUEL SENDER
EBG – ENGINE BLOCK GROUND
GND – CONTROLLER BOX GROUND
PGND – PANEL GROUND

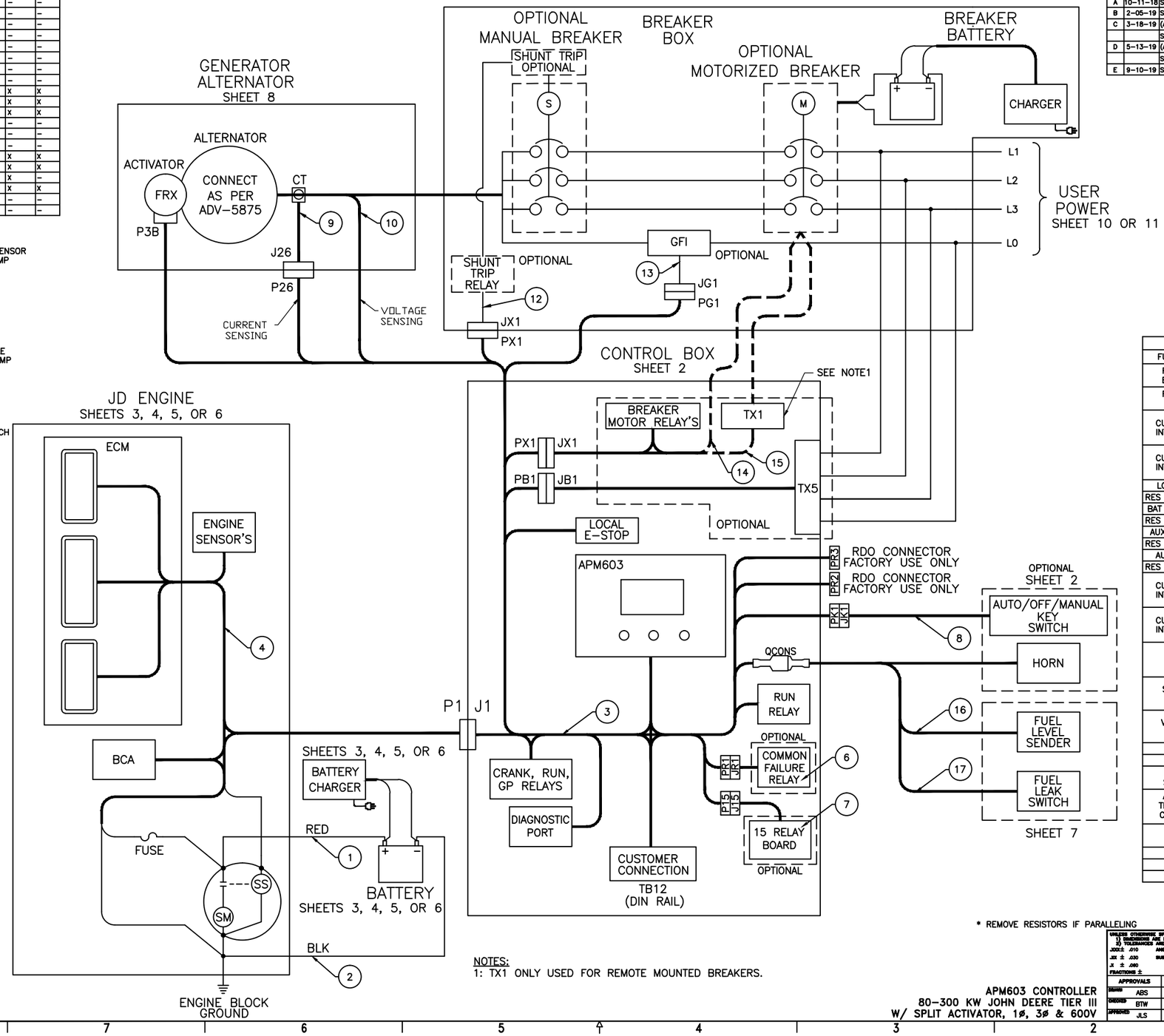

NOTES:
1: TX1 ONLY USED FOR REMOTE MOUNTED BREAKERS.

REV	DATE	REVISION	BY	H/F
A	10–11–18	SEE SHEET 2 [CT191090]	TLK	
B	2–05–19	SEE SHEETS 10 & 11 [CT193517]	SMH	
C	3–18–19	(A–1,–2)CHART UPDATED FOR SPEED AND VOLTAGE BIAS; SEE		
		SHEET 2 [CT194009]	SMH	
D	5–13–19	(A,B,C–1) TB12–42 THRU 44 ADDED, MOVED VOLTAGE AND		
		SPEED BIAS ON TB12, SEE SHEET 2 [CT195741]	TEV	
E	9–10–19	SEE SHEET 2 [CT198508]	TEV	

TB12 CONNECTION CHART			
FUNCTION	POS	SIGNAL DESCRIPTION	
REMOTE E–STOP	1	REMOTE EMERGENCY STOP	
	2		
REMOTE START	3	REMOTE START SIGNAL	
	4		
CUSTOMER INTERFACE	5	FUSED BATTERY POWER	
	6	BATT VOLTS WHEN RUNNING	
	7	BATTERY NEGATIVE	
CUSTOMER INTERFACE	8	A (–)	ISOLATED RS–485 #2 (PGEN)
	9	B (+)	
	10	SHIELD	
LOW FUEL	11	LOW FUEL LEVEL SWITCH	
RES IN RETURN	12	LOW FUEL LEVEL SWITCH RETURN	
BAT CHRG FLT	13	BATTERY CHARGER FAULT	
RES IN RETURN	14	BATTERY CHARGER FAULT RETURN	
AUX WARNING	15	AUXILIARY WARNING	
RES IN RETURN	16	AUXILIARY WARNING RETURN	
AUX FAULT	17	AUXILIARY FAULT	
RES IN RETURN	18	AUXILIARY FAULT RETURN	
CUSTOMER INTERFACE	19	A (–)	ISOLATED RS–485 #3 (MODBUS/PGEN)
	20	B (+)	
	21	SHIELD	
CUSTOMER INTERFACE	22	A (–)	NON–ISOLATED RS–485 #4 (MODBUS RSA)
	23	B (+)	
	24	SHIELD	
RUN RELAY	25	COMMON CONTACT	
	26	NORMALLY OPEN CONTACT	
	27	NORMALLY CLOSED CONTACT	
SPEED BIAS	28	SPEED BIAS (+)	
	29	SPEED BIAS (–)	
	30	SHIELD	
VOLTAGE BIAS	31	VOLTAGE BIAS (+)	
	32	VOLTAGE BIAS (–)	
	33	SHIELD	
SPARE	34	SPARE	
SPARE	35	SPARE	
DROOP SELECT	36	ISOCHRONOUS JP2 IN	DROOP JP2 OUT
ANALOG THROTTLE CONTROL	37*	+5 VDC REF	
	38*	SIGNAL (+2.5 VDC NORM)	
	39*	SENSOR RETURN	
IDLE MODE	40	CONSULT FACTORY	
	41		
SPARE	42	SPARE	
SPARE	43	SPARE	
SPARE	44	SPARE	

* REMOVE RESISTORS IF PARALLELING

APM603 CONTROLLER
80–300 KW JOHN DEERE TIER III
W/ SPLIT ACTIVATOR, 1ø, 3ø & 600V

UNLESS OTHERWISE SPECIFIED –
1) DIMENSIONS ARE IN INCHES
2) TOLERANCES ARE:
.XXX ± .010 ANGLES ± 1/2°
.XX ± .030 SURFACE FINISH
.X ± .060 MAX.
FRACTIONS ±

APPROVALS		DATE
DRAWN	ABS	3–12–18
CHECKED	BTW	3–12–18
APPROVED	JLS	3–12–18

KOHLER.
KOHLER, WI 53044

TITLE DIAGRAM, SCHEMATIC
JD 80–300KW, APM603

SCALE N/A | SHEET 1–11 | PLOTTED | DWG. NO. ADV–9057 | D

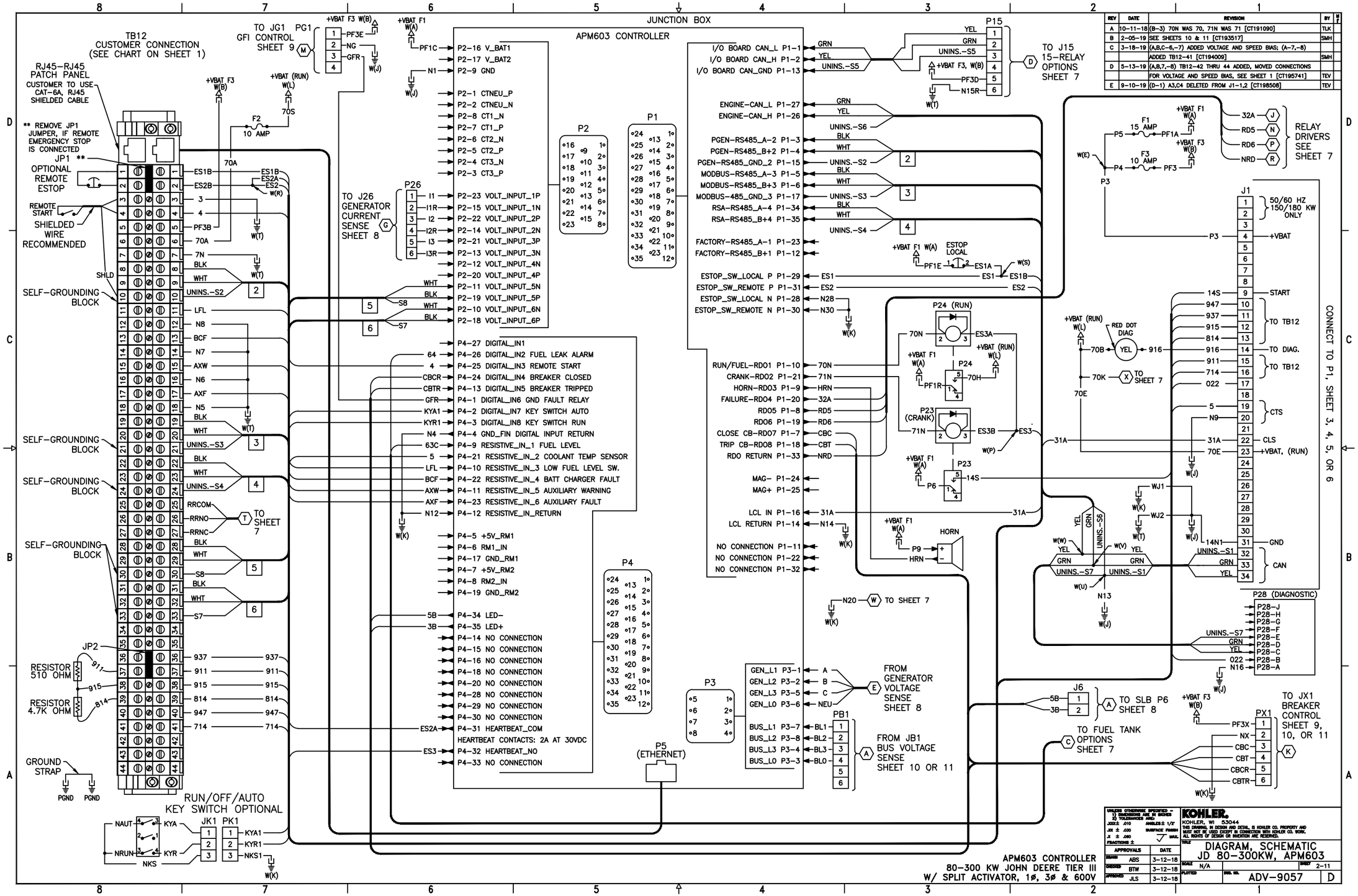

REV	DATE	REVISION	BY
A	10–11–18	(B–3) 70N WAS 70, 71N WAS 71 [CT191090]	TLK
B	2–05–19	SEE SHEETS 10 & 11 [CT193517]	SMH
C	3–18–19	(A,B,C–6,–7) ADDED VOLTAGE AND SPEED BIAS; (A–7,–8)	
		ADDED TB12–41 [CT194009]	SMH
D	5–13–19	(A,B,7,–8) TB12–42 THRU 44 ADDED, MOVED CONNECTIONS	
		FOR VOLTAGE AND SPEED BIAS, SEE SHEET 1 [CT195741]	TEV
E	9–10–19	(D–1) A3,C4 DELETED FROM J1–1,2 [CT198508]	TEV

REV	DATE	REVISION	BY	N/F
–	3–12–18	NEW DRAWING [CT190243]	ABS	
A	10–11–18	SEE SHEET 2 [CT191090]	TLK	
B	2–05–19	SEE SHEETS 10 & 11 [CT193517]	SMH	
C	3–18–19	SEE SHEETS 1 & 2 [CT194009]	SMH	
D	5–13–19	SEE SHEETS 1 & 2 [CT195741]	TEV	
E	9–10–19	SEE SHEET 2 [CT198508]	TEV	

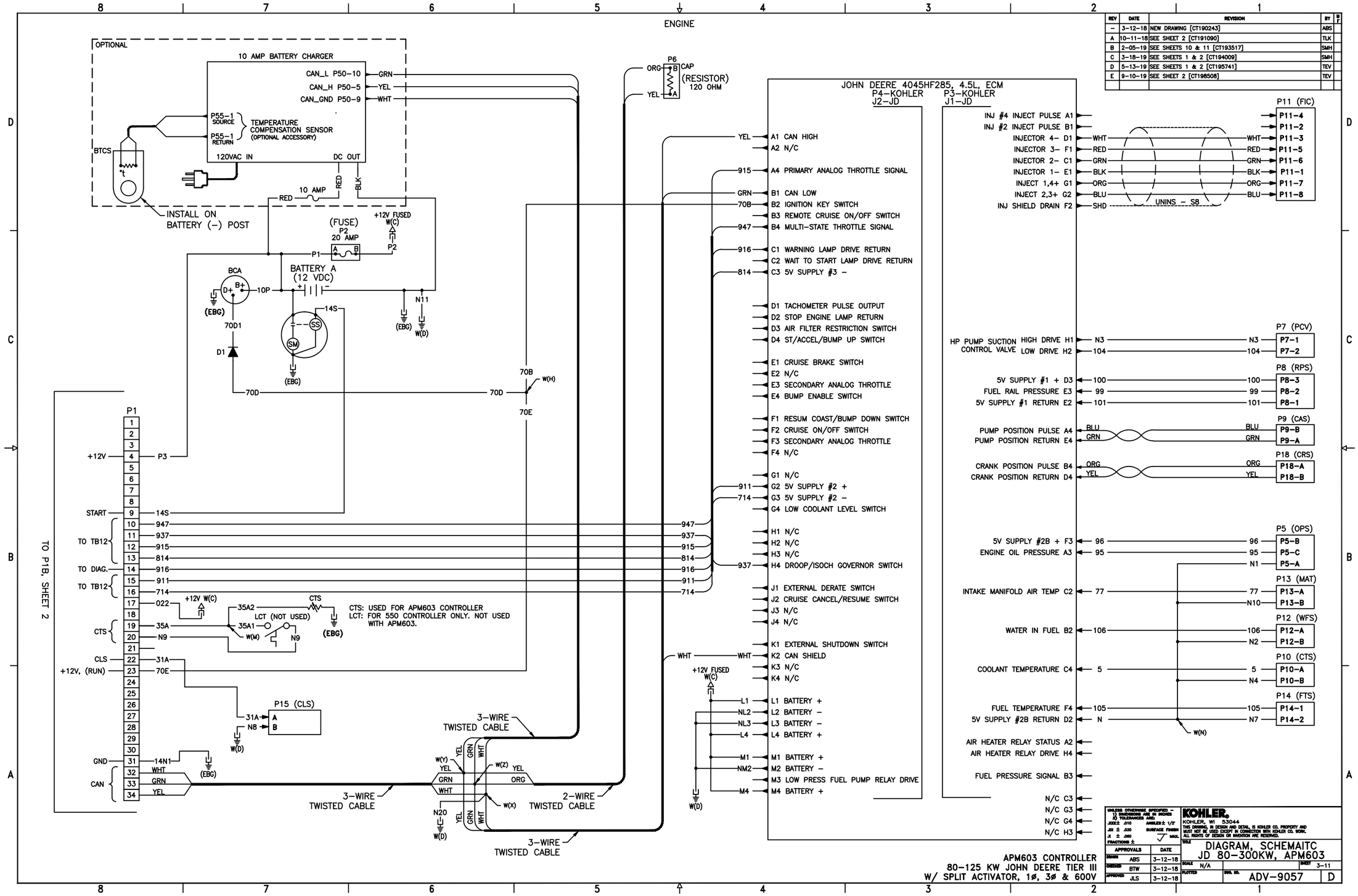

REV	DATE	REVISION	BY	N/F
–	3–12–18	NEW DRAWING [CT190243]	ABS	
A	10–11–18	SEE SHEET 2 [CT191090]	TLK	
B	2–05–19	SEE SHEETS 10 & 11 [CT193517]	SMH	
C	3–18–19	SEE SHEETS 1 & 2 [CT194009]	SMH	
D	5–13–19	SEE SHEETS 1 & 2 [CT195741]	TEV	
E	9–10–19	SEE SHEET 2 [CT198508]	TEV	

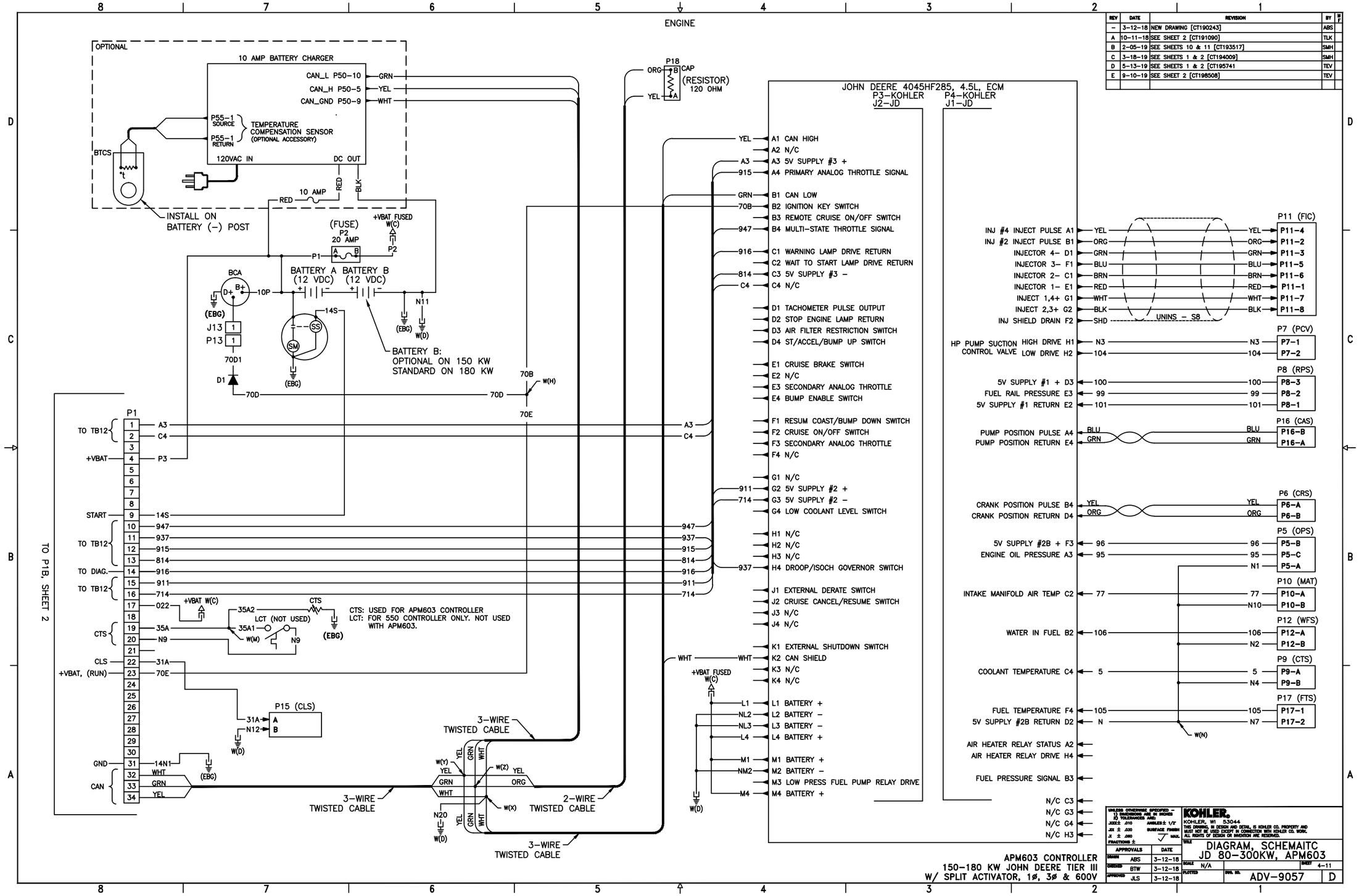

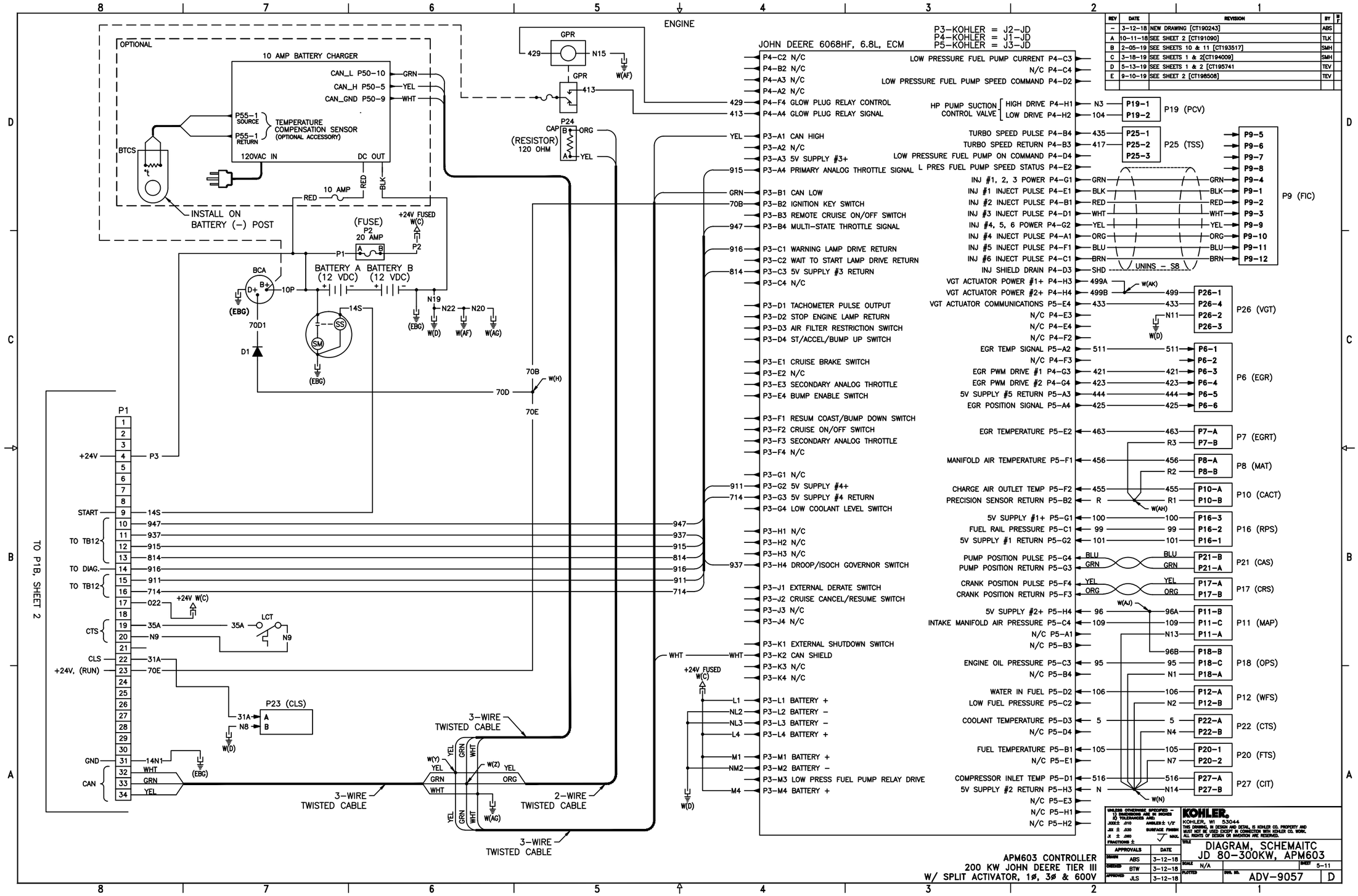

REV	DATE	REVISION	BY	W/F
–	3-12-18	NEW DRAWING [CT190243]	ABS	
A	10-11-18	SEE SHEET 2 [CT191090]	TLK	
B	2-05-19	SEE SHEETS 10 & 11 [CT193517]	SMH	
C	3-18-19	SEE SHEETS 1 & 2[CT194009]	SMH	
D	5-13-19	SEE SHEETS 1 & 2 [CT195741	TEV	
E	9-10-19	SEE SHEET 2 [CT198508]	TEV	

APPROVALS		DATE
DRAWN	ABS	3-12-18
CHECKED	BTW	3-12-18
APPROVED	JLS	3-12-18

SCALE N/A SHEET 5-11

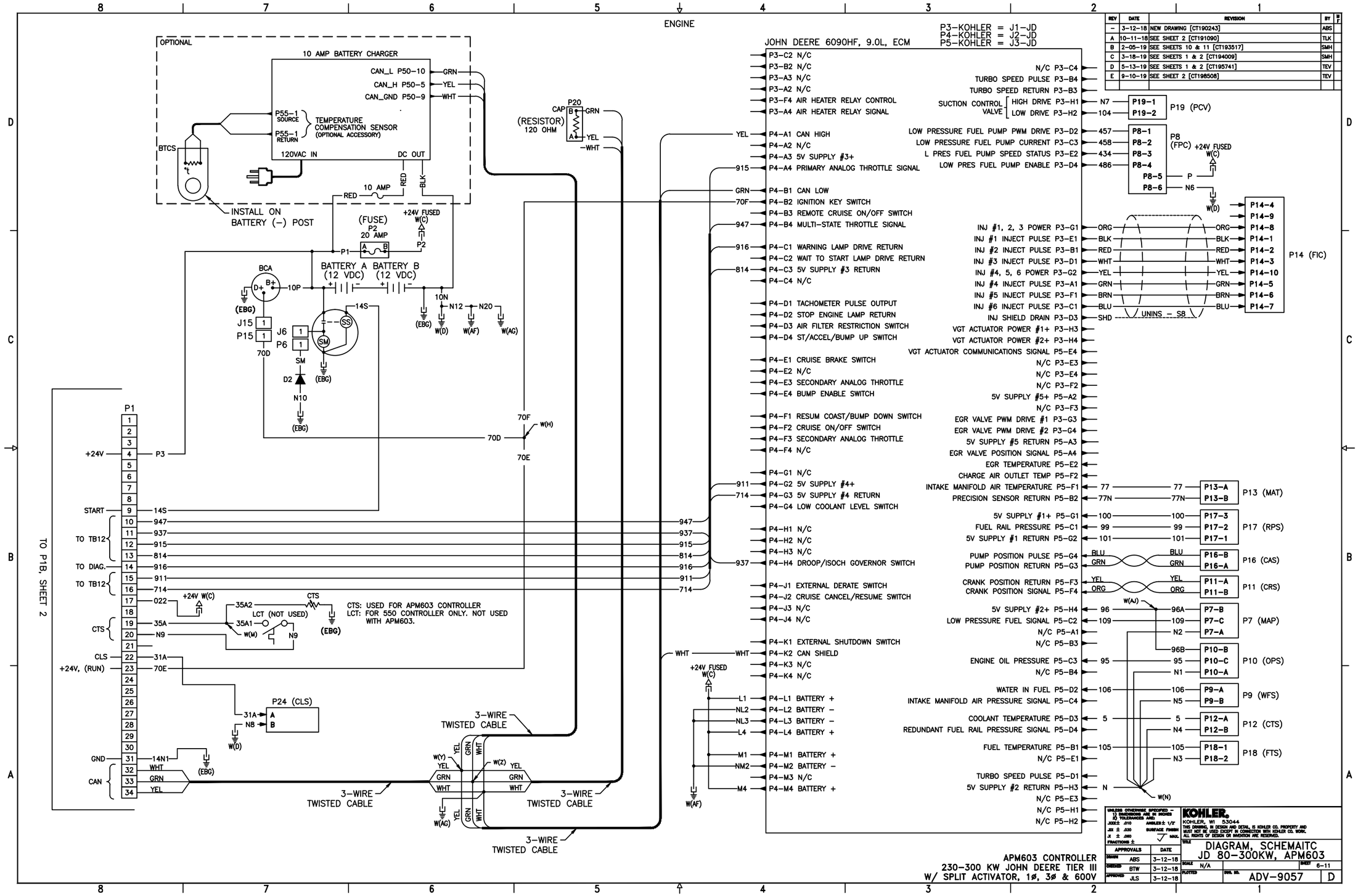

REV	DATE	REVISION	BY	N/F
–	3-12-18	NEW DRAWING [CT190243]	ABS	
A	10-11-18	SEE SHEET 2 [CT191090]	TLK	
B	2-05-19	SEE SHEETS 10 & 11 [CT193517]	SMH	
C	3-18-19	SEE SHEETS 1 & 2 [CT194009]	SMH	
D	5-13-19	SEE SHEETS 1 & 2 [CT195741]	TEV	
E	9-10-19	SEE SHEET 2 [CT198508]	TEV	

REV	DATE	REVISION	BY	M/F
–	3-12-18	NEW DRAWING [CT190243]	ABS	
A	10-11-18	SEE SHEET 2 [CT191090]	TLK	
B	2-05-19	SEE SHEETS 10 & 11 [CT193517]	SMH	
C	3-18-19	SEE SHEETS 1 & 2 [CT194009]	SMH	
D	5-13-19	SEE SHEETS 1 & 2 [CT195741]	TEV	
E	9-10-19	SEE SHEET 2 [CT198508]	TEV	

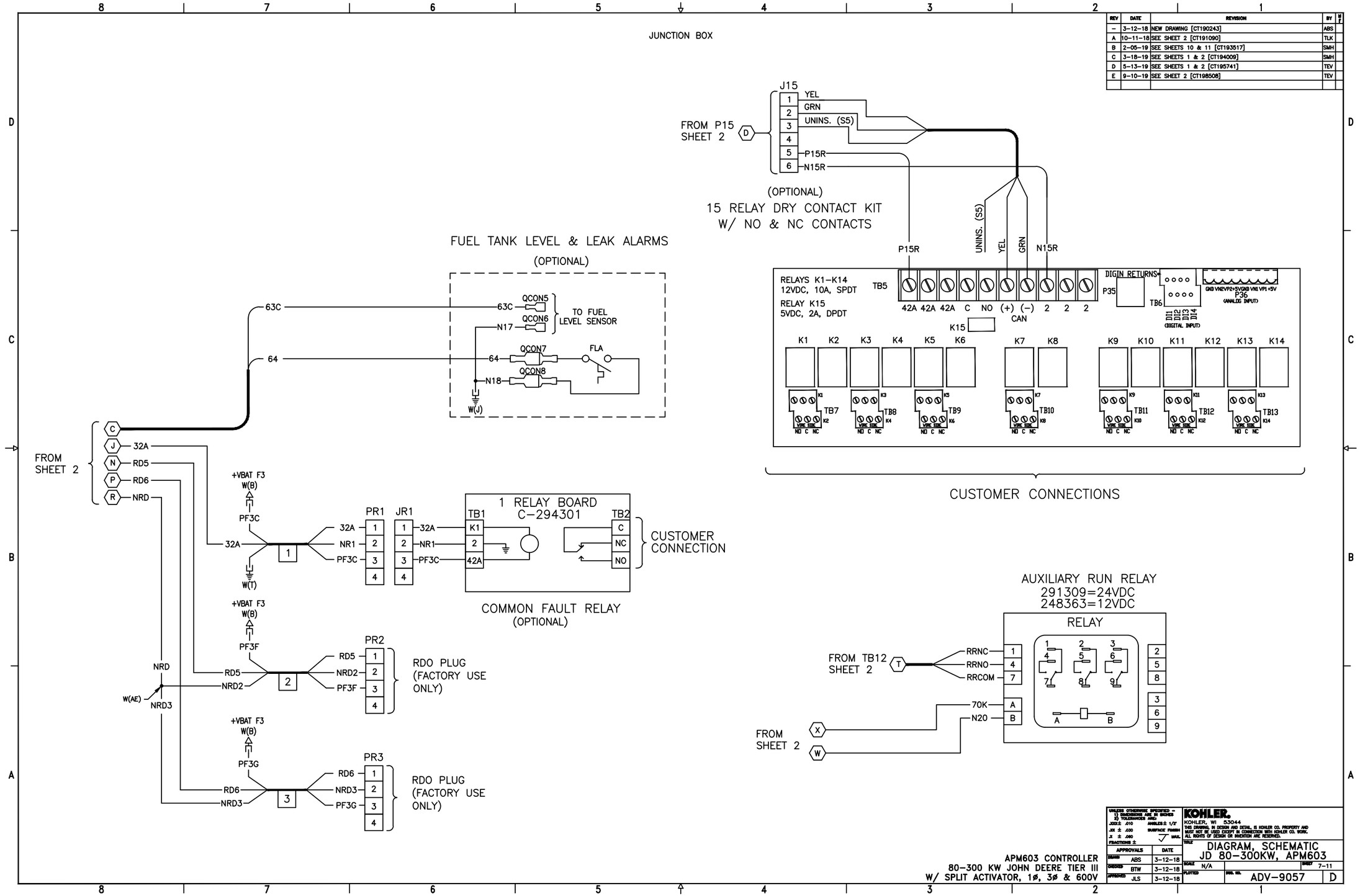

REV	DATE	REVISION	BY	M/F
–	3–12–18	NEW DRAWING [CT190243]	ABS	
A	10–11–18	SEE SHEET 2 [CT191090]	TLK	
B	2–05–19	SEE SHEETS 10 & 11 [CT193517]	SMH	
C	3–18–19	SEE SHEETS 1 & 2[CT194009]	SMH	
D	5–13–19	SEE SHEETS 1 & 2 [CT195741]	TEV	
E	9–10–19	SEE SHEET 2 [CT198508]	TEV	

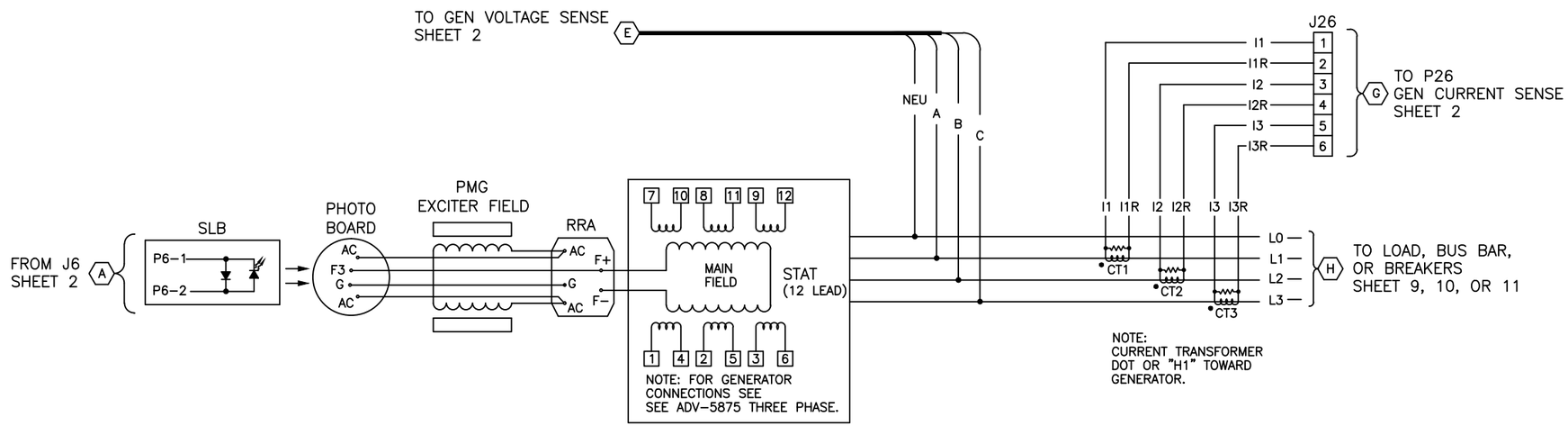

ALTERNATOR SIDE
APM603 CONTROLLER
80–300 KW JOHN DEERE TIER III
W/ SPLIT ACTIVATOR, 1ø, 3ø & 600V

UNLESS OTHERWISE SPECIFIED –
1) DIMENSIONS ARE IN INCHES
2) TOLERANCES ARE:
.XXX± .010 ANGLES± 1/2°
.XX ± .030 SURFACE FINISH
.X ± .060 √ MAX.
FRACTIONS ±

APPROVALS		DATE
DRAWN	ABS	3–12–18
CHECKED	BTW	3–12–18
APPROVED	JLS	3–12–18

KOHLER.
KOHLER, WI 53044

TITLE DIAGRAM, SCHEMATIC
JD 80–300KW, APM603

SCALE N/A SHEET 8–11
PLOTTED DWG. NO. ADV–9057 D

REV	DATE	REVISION	BY	W/
–	3–12–18	NEW DRAWING [CT190243]	ABS	
A	10–11–18	SEE SHEET 2 [CT191090]	TLK	
B	2–05–19	SEE SHEETS 10 & 11 [CT193517]	SMH	
C	3–18–19	SEE SHEETS 1 & 2[CT194009]	SMH	
D	5–13–19	SEE SHEETS 1 & 2 [CT195741]	TEV	
E	9–10–19	SEE SHEET 2 [CT198508]	TEV	

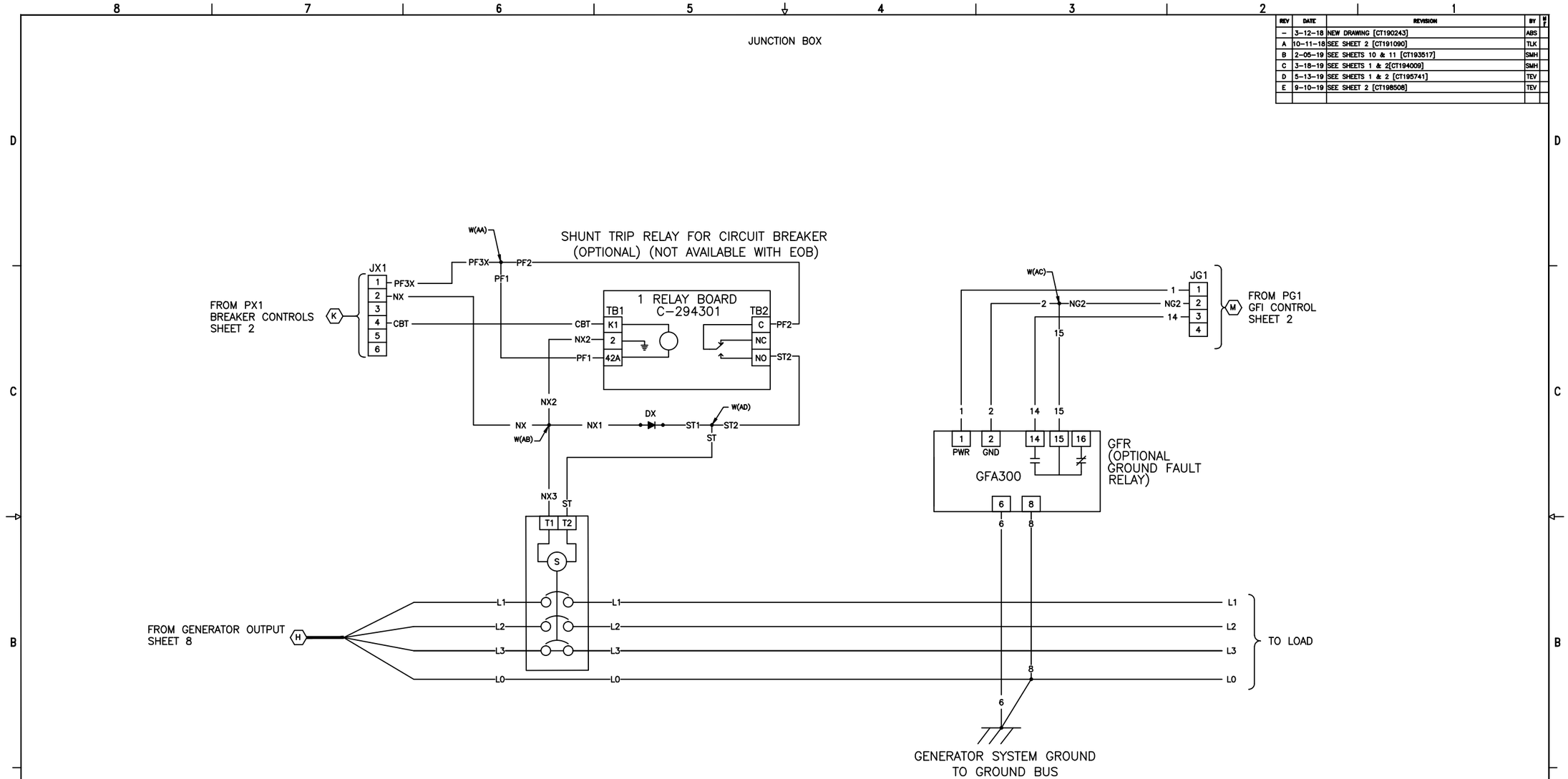

SHUNT TRIP OPTION
APM603 CONTROLLER
80–300 KW JOHN DEERE TIER III
W/ SPLIT ACTIVATOR, 1ø, 3ø & 600V

UNLESS OTHERWISE SPECIFIED –
1) DIMENSIONS ARE IN INCHES
2) TOLERANCES ARE:
.XX± .010 ANGLES± 1/2°
.XX ± .030 SURFACE FINISH
.X ± .060 MAX.
FRACTIONS ±

APPROVALS	DATE
DRAWN ABS	3–12–18
CHECKED BTW	3–12–18
APPROVED JLS	3–12–18

KOHLER.
KOHLER, WI 53044

TITLE DIAGRAM, SCHEMATIC
JD 80–300KW, APM603

SCALE N/A SHEET 9–11
PLOTTED DWG. NO. ADV–9057 D

REV	DATE	REVISION	BY	W/F
–	3–12–18	NEW DRAWING [CT190243]	ABS	
A	10–11–18	SEE SHEET 2 [CT191090]	TLK	
B	2–05–19	(C–5) WIRE OB IS MOVED TO 4 FROM 5 OF P31; SEE SHEET 11 [CT193517]	SMH	
C	3–18–19	SEE SHEETS 1 & 2 [CT194009]	SMH	
D	5–13–19	SEE SHEETS 1 & 2 [CT195741	TEV	
E	9–10–19	SEE SHEET 2 [CT198508]	TEV	

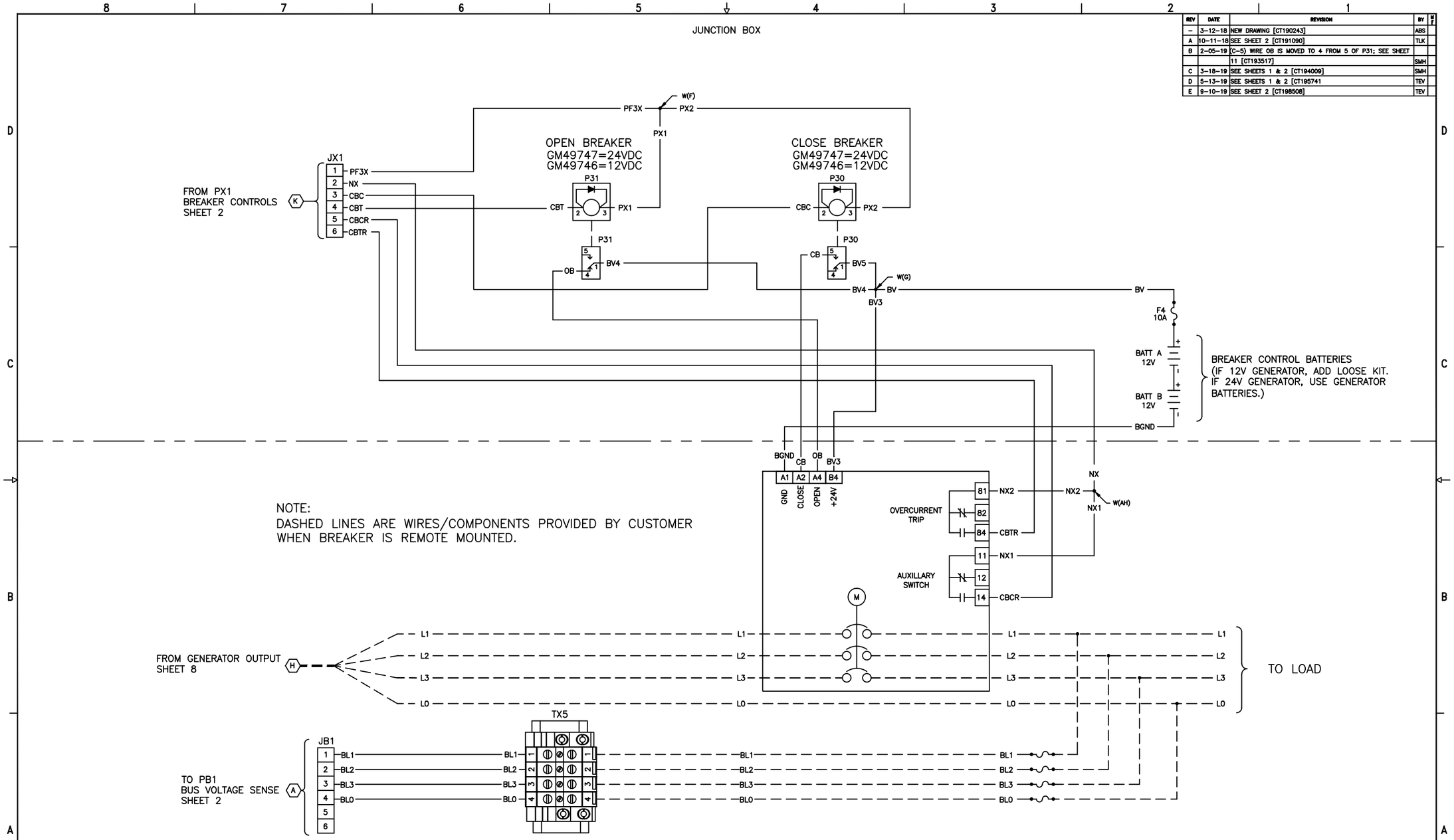

ELECTRICALLY OPERATED BREAKER OPTION
LOCAL GENERATOR MOUNTED BREAKER
APM603 CONTROLLER
80–300 KW JOHN DEERE TIER III
W/ SPLIT ACTIVATOR, 1ø, 3ø & 600V

UNLESS OTHERWISE SPECIFIED –
1) DIMENSIONS ARE IN INCHES
2) TOLERANCES ARE:
.XXX ± .010 ANGLES ± 1/2°
.XX ± .030 SURFACE FINISH
.X ± .060 √ MAX.
FRACTIONS ±

APPROVALS		DATE
DRAWN	ABS	3–12–18
CHECKED	BTW	3–12–18
APPROVED	JLS	3–12–18

KOHLER.
KOHLER, WI 53044
THIS DRAWING, IN DESIGN AND DETAIL, IS KOHLER CO. PROPERTY AND MUST NOT BE USED EXCEPT IN CONNECTION WITH KOHLER CO. WORK. ALL RIGHTS OF DESIGN OR INVENTION ARE RESERVED.

TITLE DIAGRAM, SCHEMATIC
JD 80–300KW, APM603

SCALE N/A | SHEET 10–11

PLOTTED | DWG. NO. ADV–9057 | D

REV	DATE	REVISION	BY	W/T
–	3–12–18	NEW DRAWING [CT190243]	ABS	
A	10–11–18	SEE SHEET 2 [CT191090]	TLK	
B	2–05–19	(D–5) WIRE OB IS MOVED TO 4 FROM 5 OF P31; SEE SHEET		
		10 [CT193517]	SMH	
C	3–18–19	SEE SHEETS 1& 2 [CT194009]	SMH	
D	5–13–19	SEE SHEETS 1 & 2 [CT195741]	TEV	
E	9–10–19	SEE SHEET 2 [CT198508]	TEV	

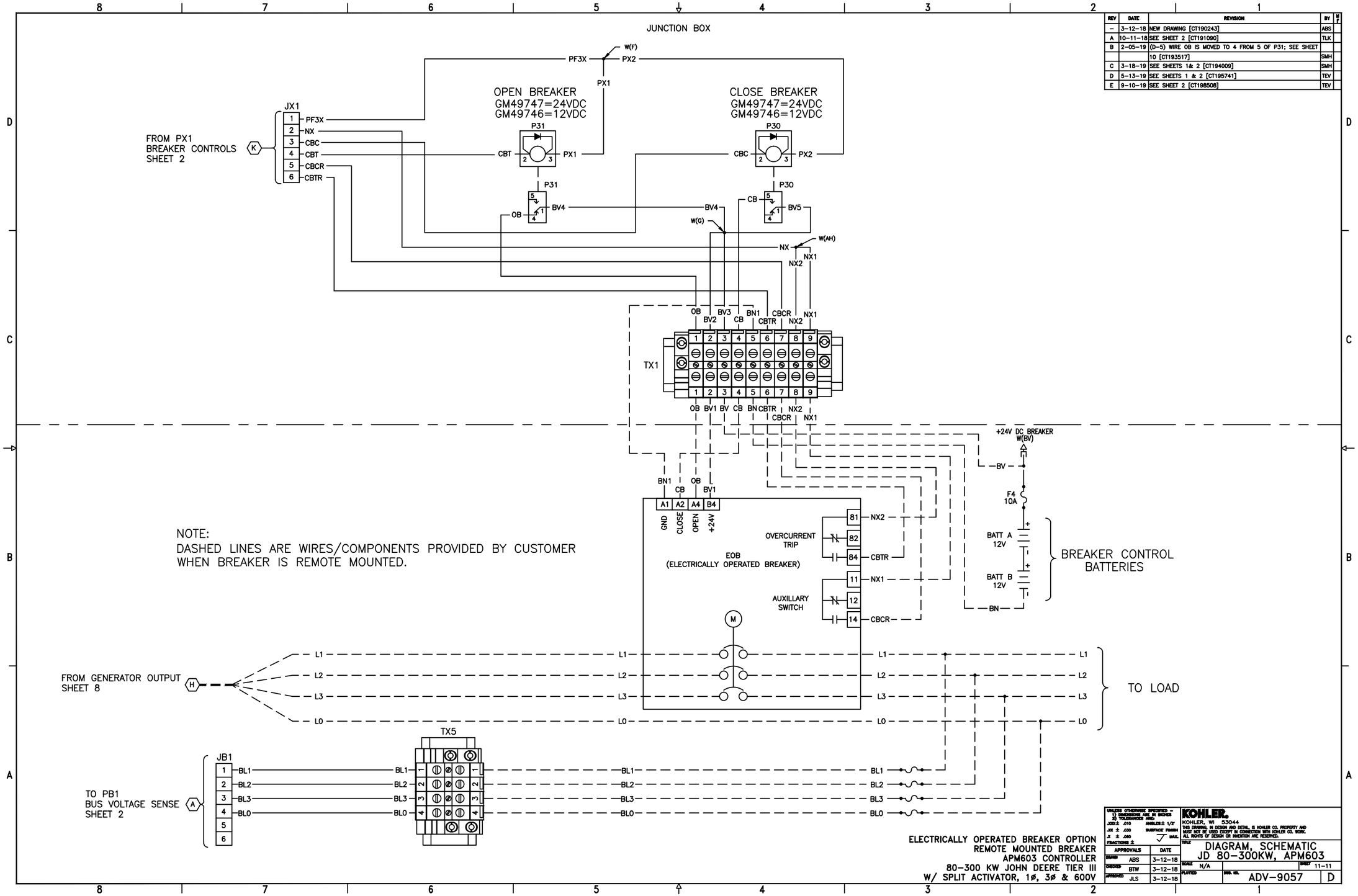

ELECTRICALLY OPERATED BREAKER OPTION
REMOTE MOUNTED BREAKER
APM603 CONTROLLER
80–300 KW JOHN DEERE TIER III
W/ SPLIT ACTIVATOR, 1ø, 3ø & 600V

UNLESS OTHERWISE SPECIFIED – 1) DIMENSIONS ARE IN INCHES 2) TOLERANCES ARE: .XX± .010 .XX ± .030 .X ± .060 FRACTIONS ± ANGLES± 1/2° SURFACE FINISH MAX.

APPROVALS		DATE
DRAWN	ABS	3–12–18
CHECKED	BTW	3–12–18
APPROVED	JLS	3–12–18

KOHLER.
KOHLER, WI 53044

TITLE DIAGRAM, SCHEMATIC
JD 80–300KW, APM603

SCALE N/A SHEET 11–11
PLOTTED DWG. NO. ADV–9057 D

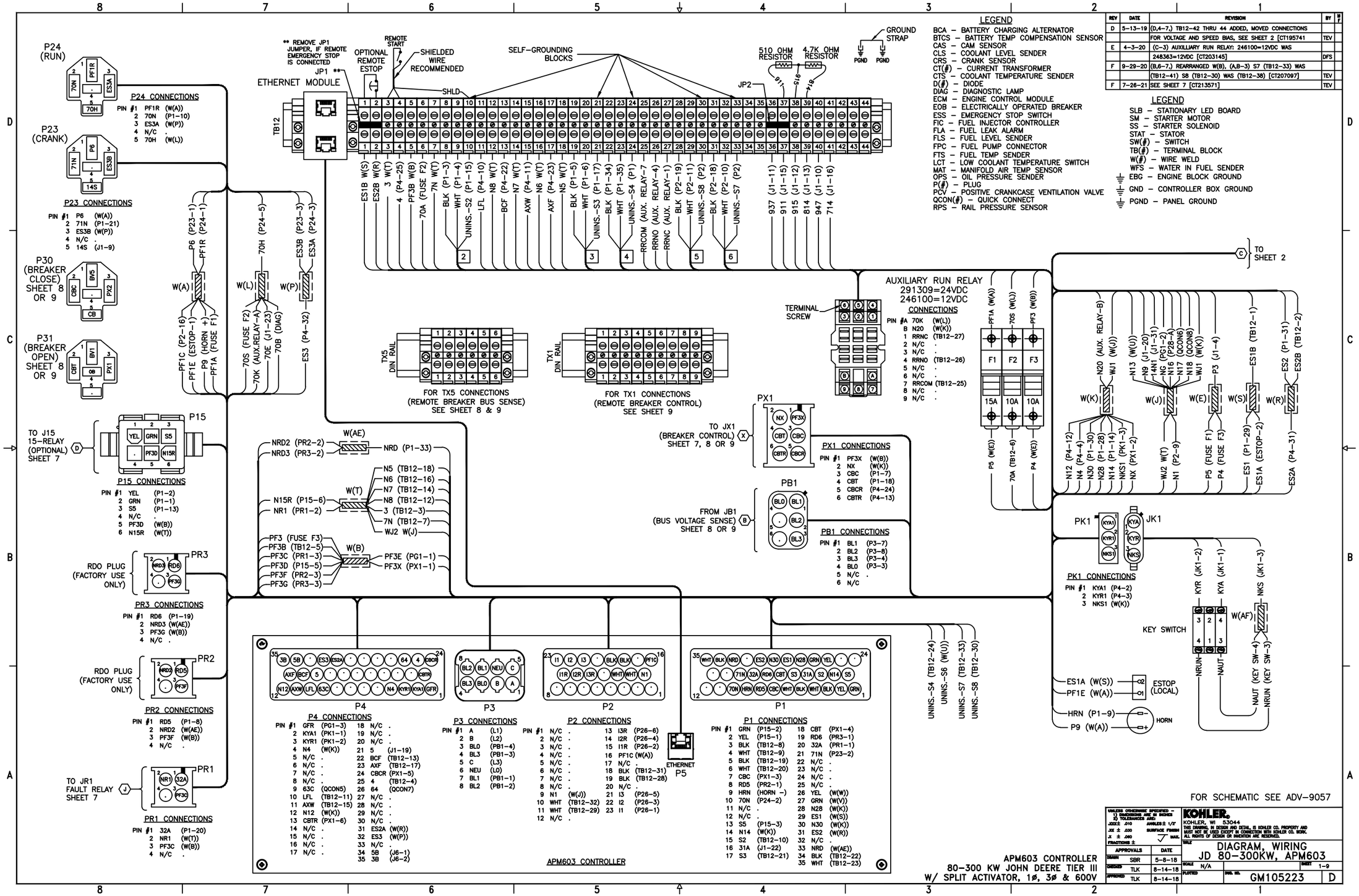

REV	DATE	REVISION	BY	ECN
D	5-13-19	(D,4-7,) TB12-42 THRU 44 ADDED, MOVED CONNECTIONS		
		FOR VOLTAGE AND SPEED BIAS, SEE SHEET 2 [CT195741	TEV	
E	4-3-20	(C-3) AUXILLIARY RUN RELAY: 246100=12VDC WAS		
		248363=12VDC [CT203145]		DFS
F	9-29-20	(B,6-7,) REARRANGED W(B), (A,B-3) S7 (TB12-33) WAS		
		(TB12-41) S8 (TB12-30) WAS (TB12-38) [CT207097]	TEV	
F	7-26-21	SEE SHEET 7 [CT213571]	TEV	

LEGEND

BCA – BATTERY CHARGING ALTERNATOR
BTCS – BATTERY TEMP COMPENSATION SENSOR
CAS – CAM SENSOR
CLS – COOLANT LEVEL SENDER
CRS – CRANK SENSOR
CT(#) – CURRENT TRANSFORMER
CTS – COOLANT TEMPERATURE SENDER
D(#) – DIODE
DIAG – DIAGNOSTIC LAMP
ECM – ENGINE CONTROL MODULE
EOB – ELECTRICALLY OPERATED BREAKER
ESS – EMERGENCY STOP SWITCH
FIC – FUEL INJECTOR CONTROLLER
FLA – FUEL LEAK ALARM
FLS – FUEL LEVEL SENDER
FPC – FUEL PUMP CONNECTOR
FTS – FUEL TEMP SENDER
LCT – LOW COOLANT TEMPERATURE SWITCH
MAT – MANIFOLD AIR TEMP SENSOR
OPS – OIL PRESSURE SENDER
P(#) – PLUG
PCV – POSITIVE CRANKCASE VENTILATION VALVE
QCON(#) – QUICK CONNECT
RPS – RAIL PRESSURE SENSOR

LEGEND

SLB – STATIONARY LED BOARD
SM – STARTER MOTOR
SS – STARTER SOLENOID
STAT – STATOR
SW(#) – SWITCH
TB(#) – TERMINAL BLOCK
W(#) – WIRE WELD
WFS – WATER IN FUEL SENDER
EBG – ENGINE BLOCK GROUND
GND – CONTROLLER BOX GROUND
PGND – PANEL GROUND

REV	DATE	REVISION	BY	WF
C	3-18-19	SEE SHEETS 1 & 8 [CT194009]	SMH	
D	5-13-19	(B-5) J1-1,2 A3,C4 REMOVED, SEE SHEET 1 [CT195741]	TEV	
E	4-3-20	SEE SHEET 1 [CT203145]	DFS	
F	9-29-20	SEE SHEET 1 [CT207097]	TEV	
G	7-26-21	SEE SHEET 7 [CT213571]	TEV	

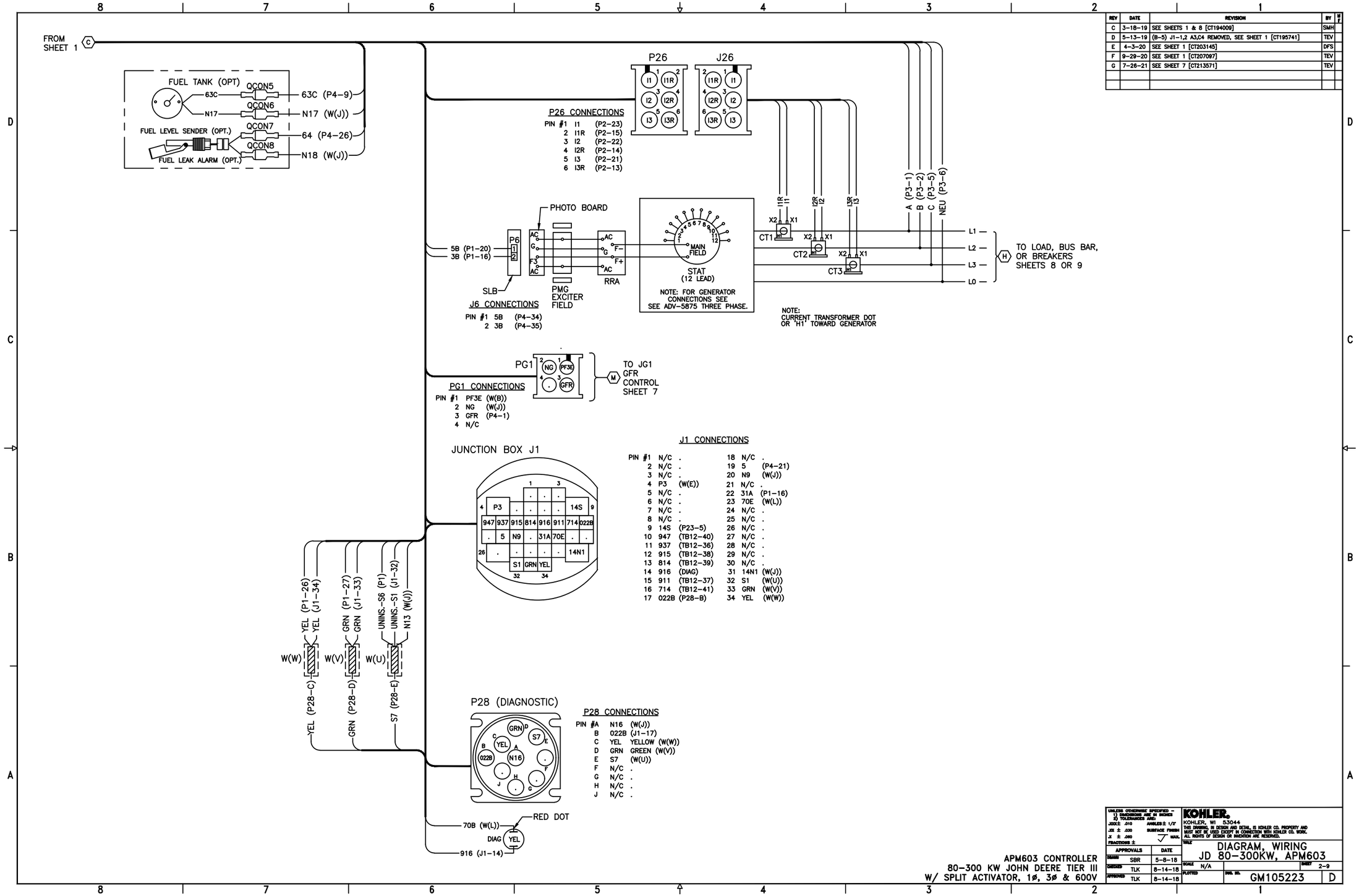

REV	DATE	REVISION	BY	VF
C	3-18-19	SEE SHEETS 1 & 8 [CT194009]	SMH	
D	5-13-19	SEE SHEETS 1 & 2 [CT195741]	TEV	
E	4-3-20	SEE SHEET 1 [CT203145]	DFS	
F	9-29-20	SEE SHEET 1 [CT207097]	TEV	
G	7-26-21	SEE SHEET 7 [CT213571]	TEV	

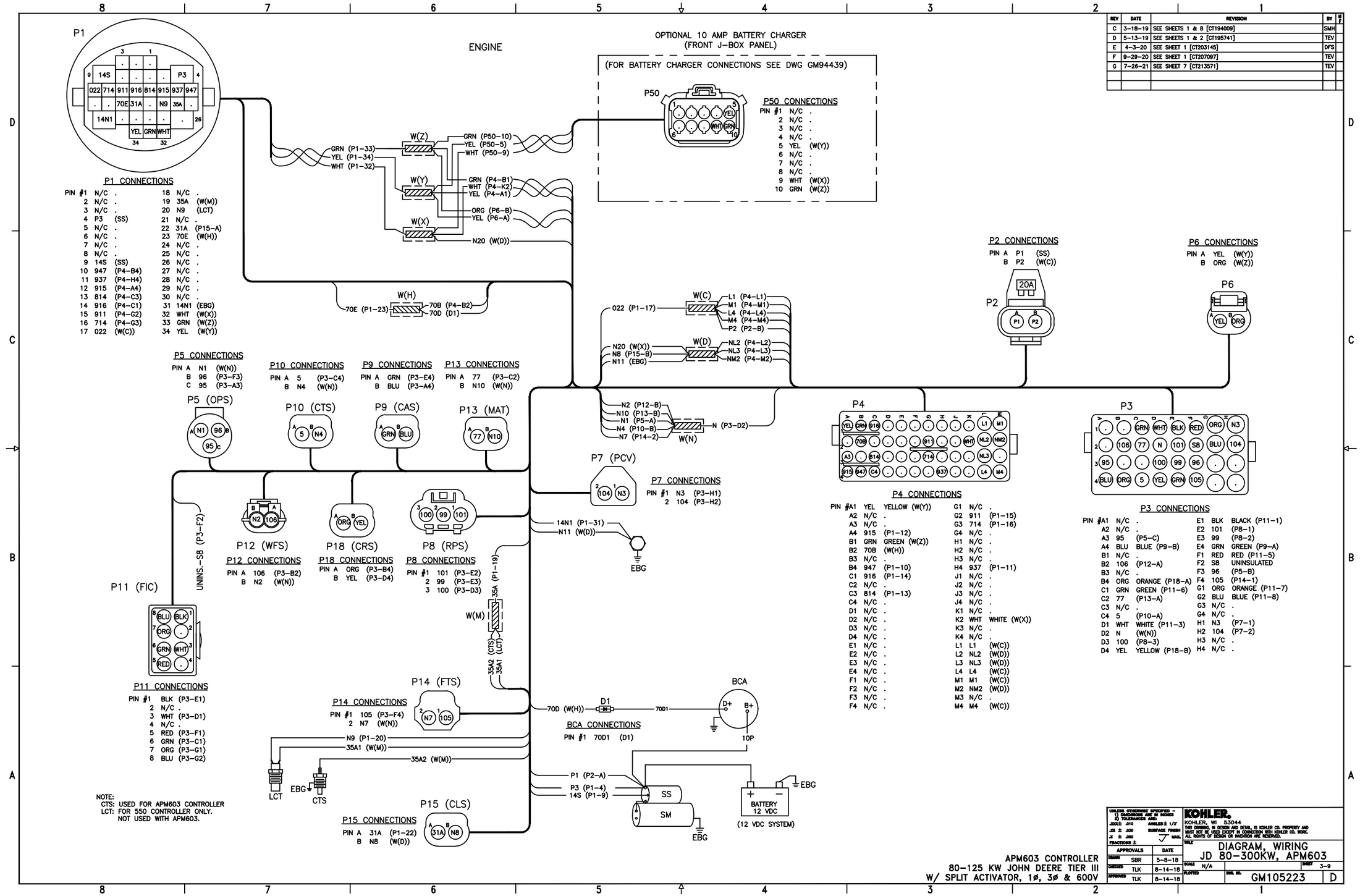

APM603 CONTROLLER
80-125 KW JOHN DEERE TIER III
W/ SPLIT ACTIVATOR, 1ø, 3ø & 600V

UNLESS OTHERWISE SPECIFIED –
1) DIMENSIONS ARE IN INCHES
2) TOLERANCES ARE:
.XXX ± .010 ANGLES ± 1/2°
.XX ± .030 SURFACE FINISH
.X ± .060 ✓ MAX.
FRACTIONS ±

APPROVALS		DATE
DRAWN	SBR	5-8-18
CHECKED	TLK	8-14-18
APPROVED	TLK	8-14-18

KOHLER.
KOHLER, WI 53044

TITLE DIAGRAM, WIRING
JD 80-300KW, APM603

SCALE N/A | SHEET 3-9
PLOTTED | DWG. NO. GM105223 | D

REV	DATE	REVISION	BY	W/E
C	3-18-19	SEE SHEETS 1 & 8 [CT194009]	SMH	
D	5-13-19	SEE SHEETS 1 & 2 [CT195741]	TEV	
E	4-3-20	SEE SHEET 1 [CT203145]	DFS	
F	9-29-20	SEE SHEET 1 [CT207097]	TEV	
G	7-26-21	SEE SHEET 1 [CT213571]	TEV	

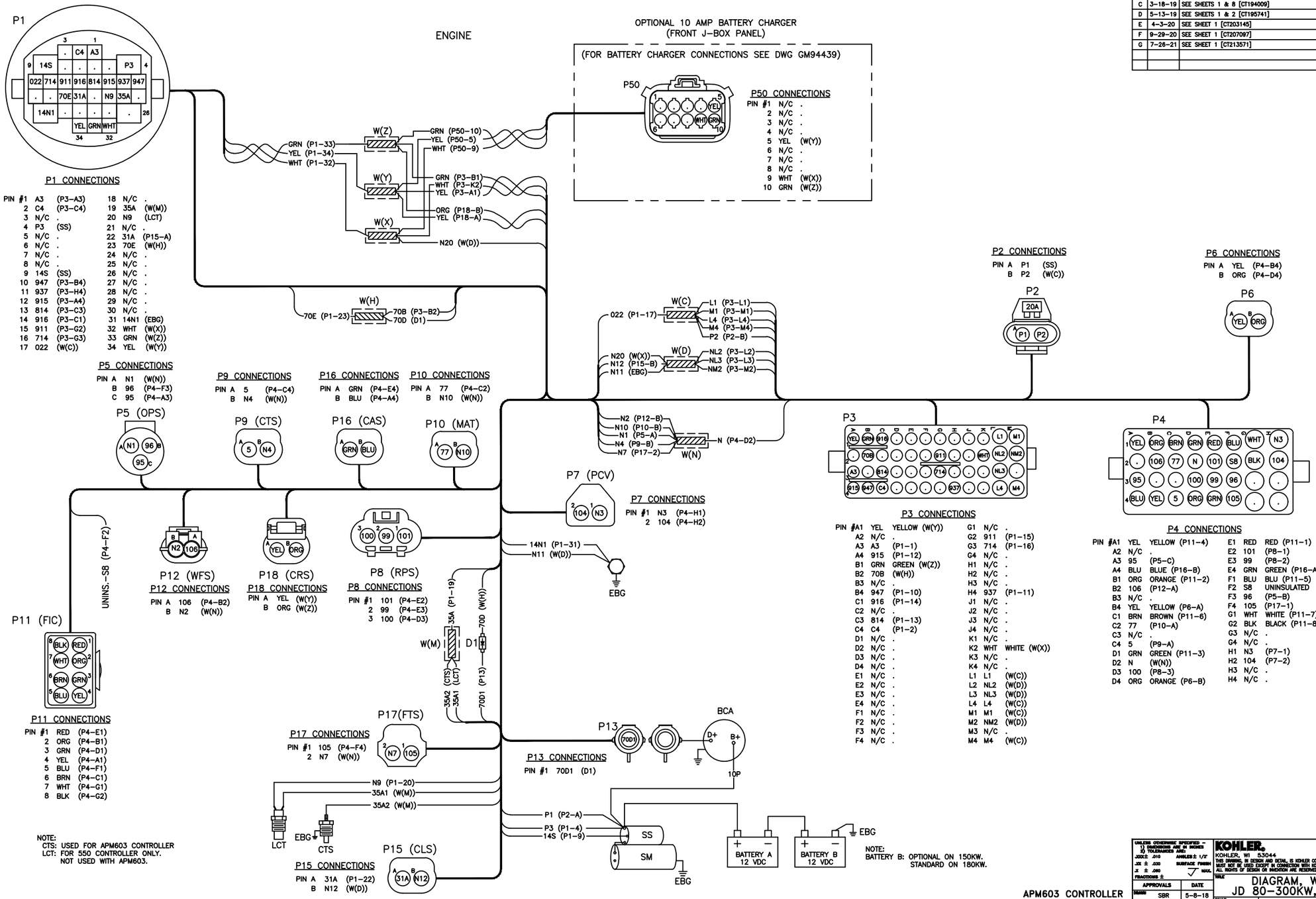

REV	DATE	REVISION	BY	VF
C	3-18-19	SEE SHEETS 1 & 8 [CT194009]	SMH	
D	5-13-19	SEE SHEETS 1 & 2 [CT195741]	TEV	
E	4-3-20	SEE SHEET 1 [CT203145]	DFS	
F	9-29-20	SEE SHEET 1 [CT207097]	TEV	
G	7-26-21	SEE SHEET 7 [CT213571]	TEV	

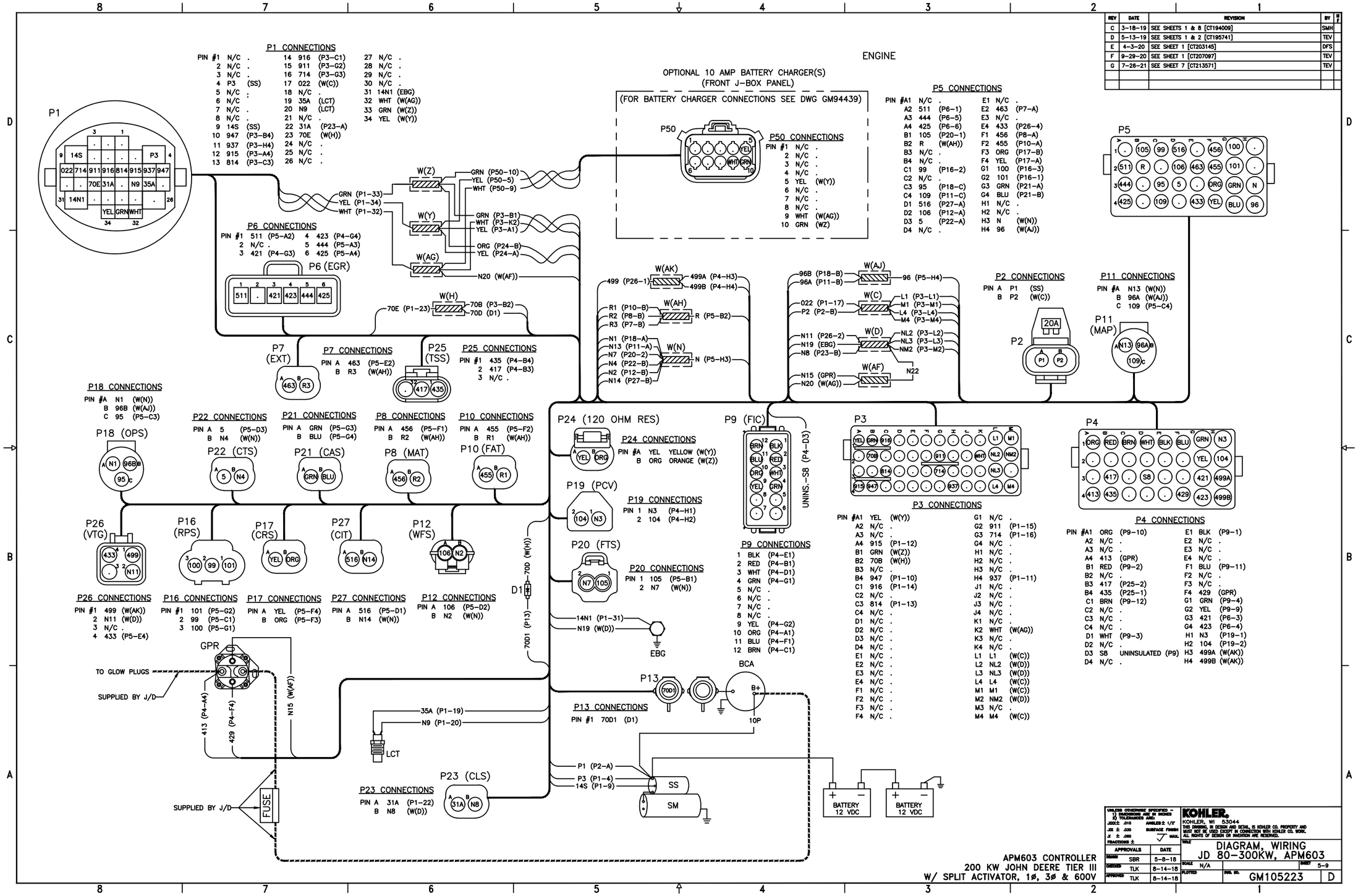

REV	DATE	REVISION	BY	VF
C	3-18-19	SEE SHEETS 1 & 8 [CT194009]	SMH	
D	5-13-19	SEE SHEETS 1 & 2 [CT195741]	TEV	
E	4-3-20	SEE SHEET 1 [CT203145]	DFS	
F	9-29-20	SEE SHEET 1 [CT207097]	TEV	
G	7-26-21	SEE SHEET 7 [CT213571]	TEV	

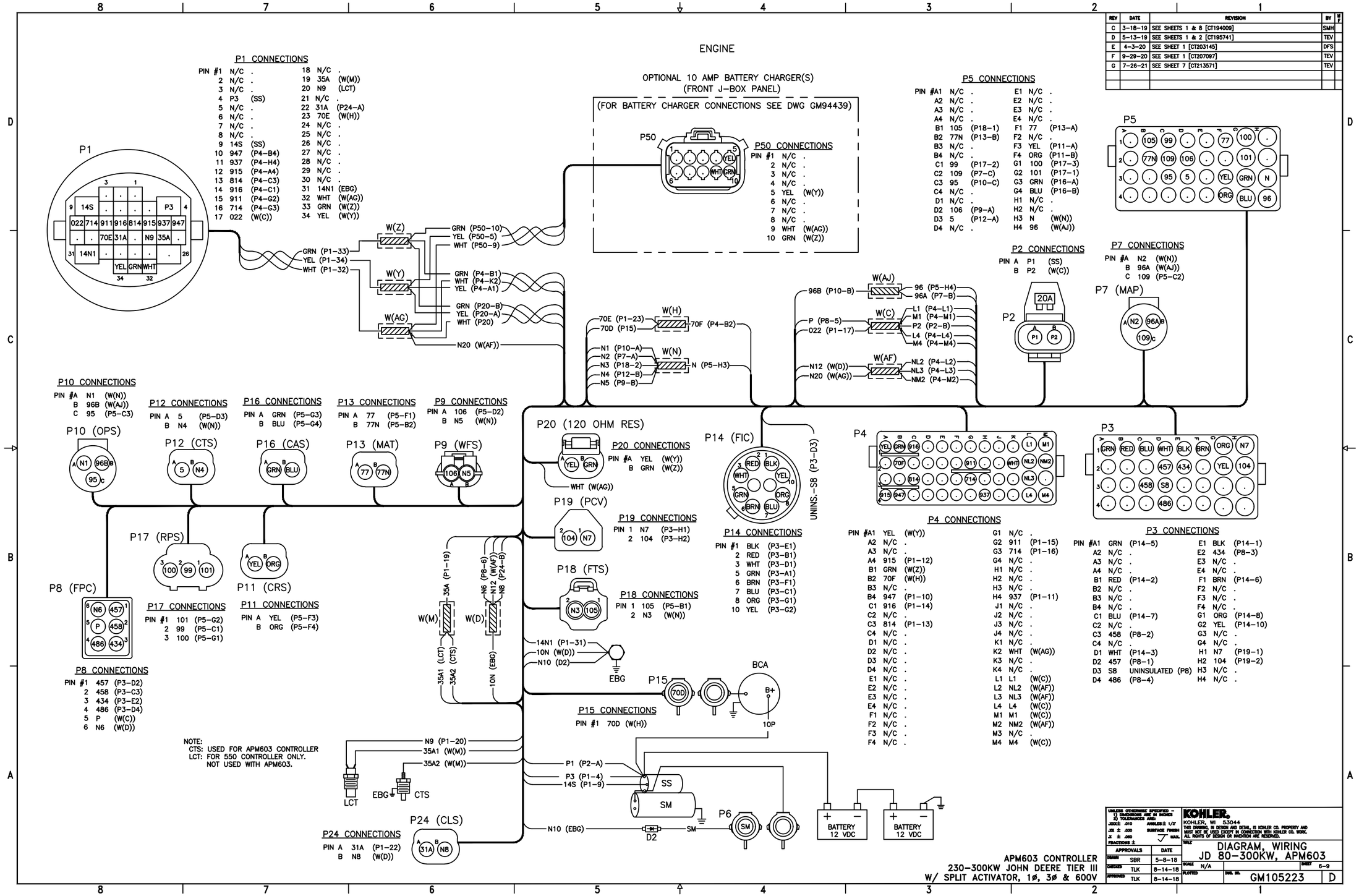

REV	DATE	REVISION	BY	W/F
C	3-18-19	SEE SHEETS 1 & 8 [CT194009]	SMH	
D	5-13-19	SEE SHEETS 1 & 2 [CT195741]	TEV	
E	4-3-20	SEE SHEET 1 [CT203145]	DFS	
F	9-29-20	SEE SHEET 1 [CT207097]	TEV	
G	7-26-21	(8-1,3) TERMINATING RESISTOR KITS ADDED [CT213571]	TEV	

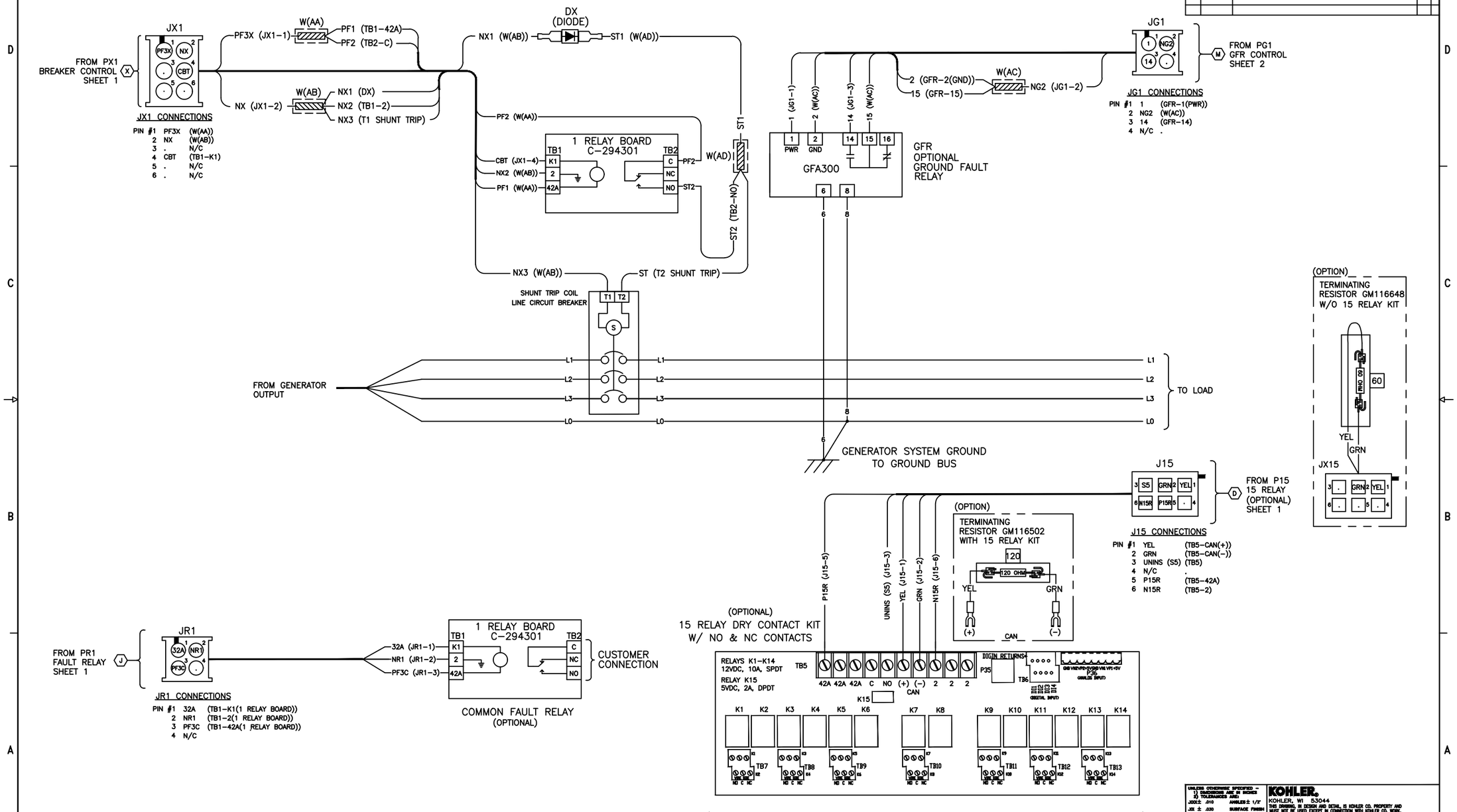

APM603 CONTROLLER
80-300 KW JOHN DEERE TIER III
W/ SPLIT ACTIVATOR, 1ø, 3ø & 600V

UNLESS OTHERWISE SPECIFIED – 1) DIMENSIONS ARE IN INCHES 2) TOLERANCES ARE: .XXX ± .010 .XX ± .030 .X ± .060 FRACTIONS ± ANGLES ± 1/2° SURFACE FINISH 125 MAX.

APPROVALS		DATE
DRAWN	SBR	5-8-18
CHECKED	TLK	8-14-18
APPROVED	TLK	8-14-18

KOHLER.
KOHLER, WI 53044

TITLE: DIAGRAM, WIRING
JD 80-300KW, APM603

SCALE: N/A | SHEET 7-9
PLOTTED | DWG. NO. GM105223 | D

REV	DATE	REVISION	BY	W/T
C	3-18-19	(D-5) F4 ADDED SEE SHEET 1 [CT194009]	SMH	
D	5-13-19	SEE SHEETS 1 & 2 [CT195741]	TEV	
E	4-3-20	SEE SHEET 1 [CT203145]	DFS	
F	9-29-20	SEE SHEET 1 [CT207097]	TEV	
G	7-26-21	SEE SHEET 7 [CT213571]	TEV	

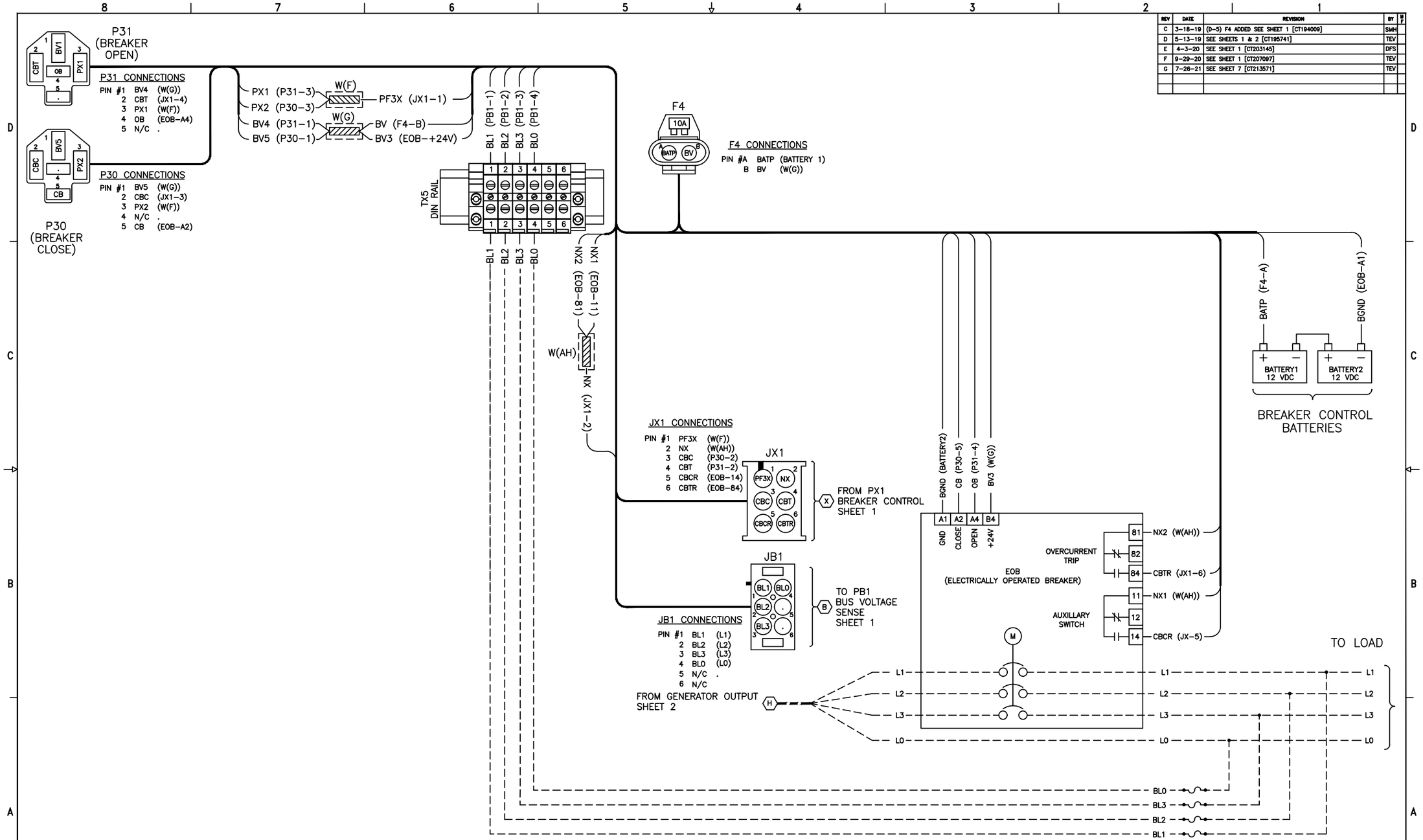

NOTE:
DASHED LINES ARE WIRES/COMPONENTS PROVIDED BY CUSTOMER WHEN BREAKER IS REMOTE MOUNTED.

APM603 CONTROLLER
80-300 KW JOHN DEERE TIER III
W/ SPLIT ACTIVATOR, 1ø, 3ø & 600V

UNLESS OTHERWISE SPECIFIED - 1) DIMENSIONS ARE IN INCHES 2) TOLERANCES ARE: .XXX± .010 ANGLES: ± 1/2° .XX ± .030 SURFACE FINISH .X ± .060 ✓ MAX. FRACTIONS ±

APPROVALS	DATE
DRAWN SBR	5-8-18
CHECKED	
APPROVED	

KOHLER.
KOHLER, WI 53044

TITLE DIAGRAM, WIRING
JD 80-300KW, APM603

SCALE N/A | SHEET 8-9 | PLOTTED | DWG. NO. GM105223 | D

REV	DATE	REVISION	BY	W/T
C	3-18-19	SEE SHEETS 1 & 8 [CT194009]	SMH	
D	5-13-19	SEE SHEETS 1 & 2 [CT195741]	TEV	
E	4-3-20	SEE SHEET 1 [CT203145]	DFS	
F	9-29-20	SEE SHEET 1 [CT207097]	TEV	
G	7-26-21	SEE SHEET 7 [CT213571]	TEV	

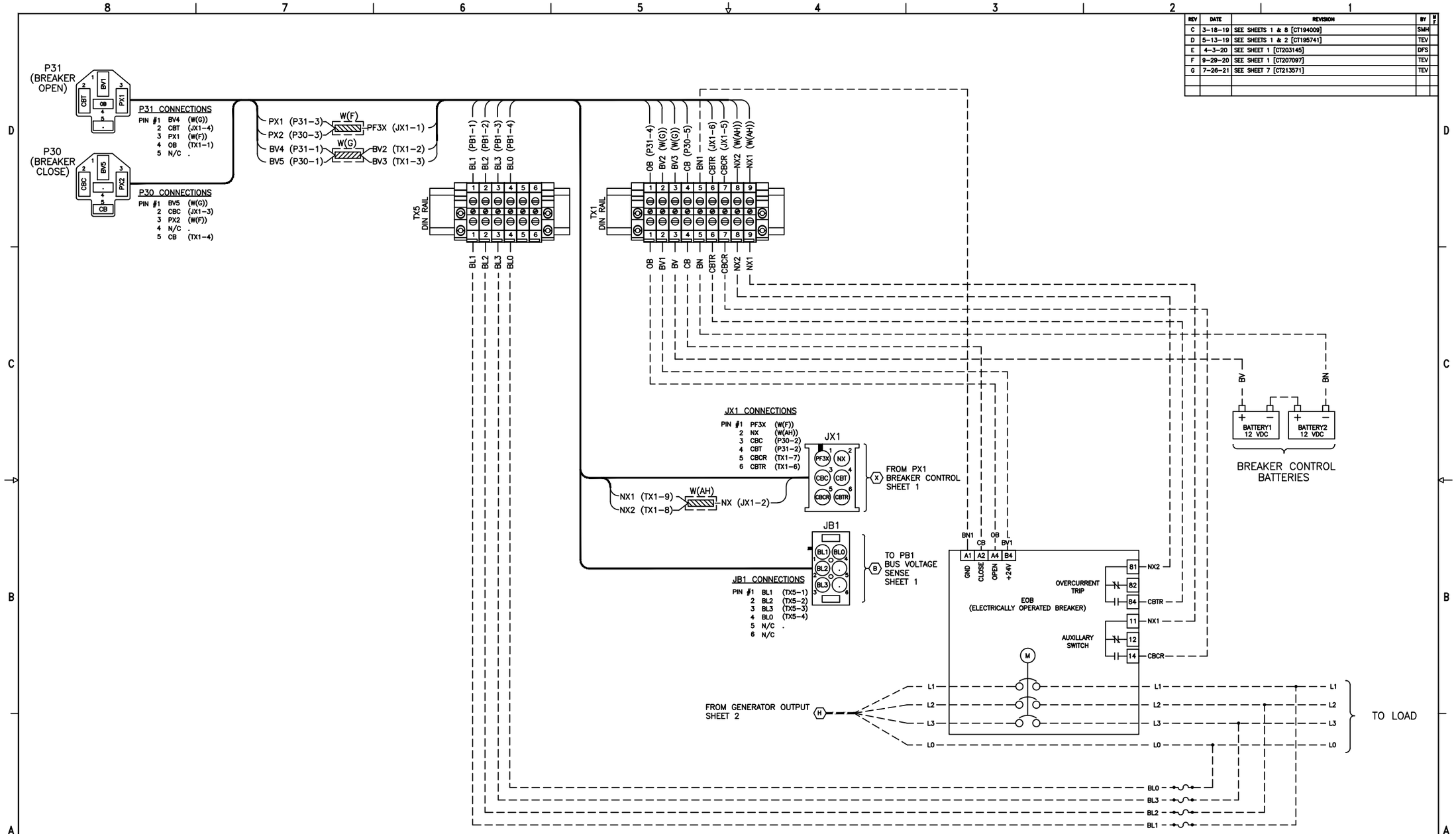

NOTE:
DASHED LINES ARE WIRES/COMPONENTS PROVIDED BY CUSTOMER WHEN BREAKER IS REMOTE MOUNTED.

APM603 CONTROLLER
80-300 KW JOHN DEERE TIER III
W/ SPLIT ACTIVATOR, 1ø, 3ø & 600V

UNLESS OTHERWISE SPECIFIED — 1) DIMENSIONS ARE IN INCHES 2) TOLERANCES ARE: .XXX± .010 .XX± .030 .X ± .060 FRACTIONS ± ANGLES± 1/2° SURFACE FINISH 125 MAX.

APPROVALS	DATE
DRAWN SBR	5-8-18
CHECKED	
APPROVED	

KOHLER
KOHLER, WI 53044

TITLE: DIAGRAM, WIRING JD 80-300KW, APM603
SCALE N/A | SHEET 9-9
PLOTTED | DWG. NO. GM105223 | D